SONY

5-024-458-**14** (1)
GB

Solid-State Memory Camcorder

FX6

ILME-FX6V/ILME-FX6VK
ILME-FX6T/ILME-FX6TK
Software Version 2.0

E-mount

Operating Instructions

© 2020 Sony Corporation

Table of Contents

1. Overview

System Configuration....3
Location and Function of Parts....4
Using the Touch Panel....10
Screen Display....11

2. Preparation

Power Supply....17
Attaching Devices....19
Configuring Basic Camcorder Operation....24
Using Memory Cards....26

3. Shooting

Basic Operation Procedure....34
Adjusting the Zoom....36
Adjusting the Focus....37
Adjusting the Brightness....43
Adjusting for Natural Colors (White Balance)....46
Setting the Audio to Record....47
Useful Functions....49
Proxy Recording....54
Shooting with the Desired Look....55
Shooting with Look Adjustment in Post-Production....57
Recording RAW Video....58

4. Network Functions

Connecting to Other Devices via LAN....59
Connecting to the Internet....62
Uploading Files....64

5. Thumbnail Screen

Thumbnail Screen....66
Playing Clips....67
Clip Operations....68

6. Menu Display and Settings

Full Menu Configuration and Hierarchy....69
Full Menu Operations....71
User Menu....73
Edit User Menu....74
Shooting Menu....75
Project Menu....80
Paint/Look Menu....87
TC/Media Menu....89
Monitoring Menu....91
Audio Menu....94
Thumbnail Menu....96
Technical Menu....97
Network Menu....100
Maintenance Menu....104
Shooting Menu Settings and Default Values....105
Image Quality Settings Saved for Each Shooting Mode....109
Saving and Loading Configuration Data....110

7. External Device Connection

Connecting External Monitors and Recording Devices....111
Synchronizing Timecodes....112
Managing/Editing Clips using a Computer....113

8. Appendix

Usage Precautions....114
Output Formats and Limitations....115
Troubleshooting....117
Error/Warning Messages....119
Items Saved in Files....121
Block Diagrams....129
Updating E-mount Lens Software....132
Licenses....133
Specifications....136

System Configuration

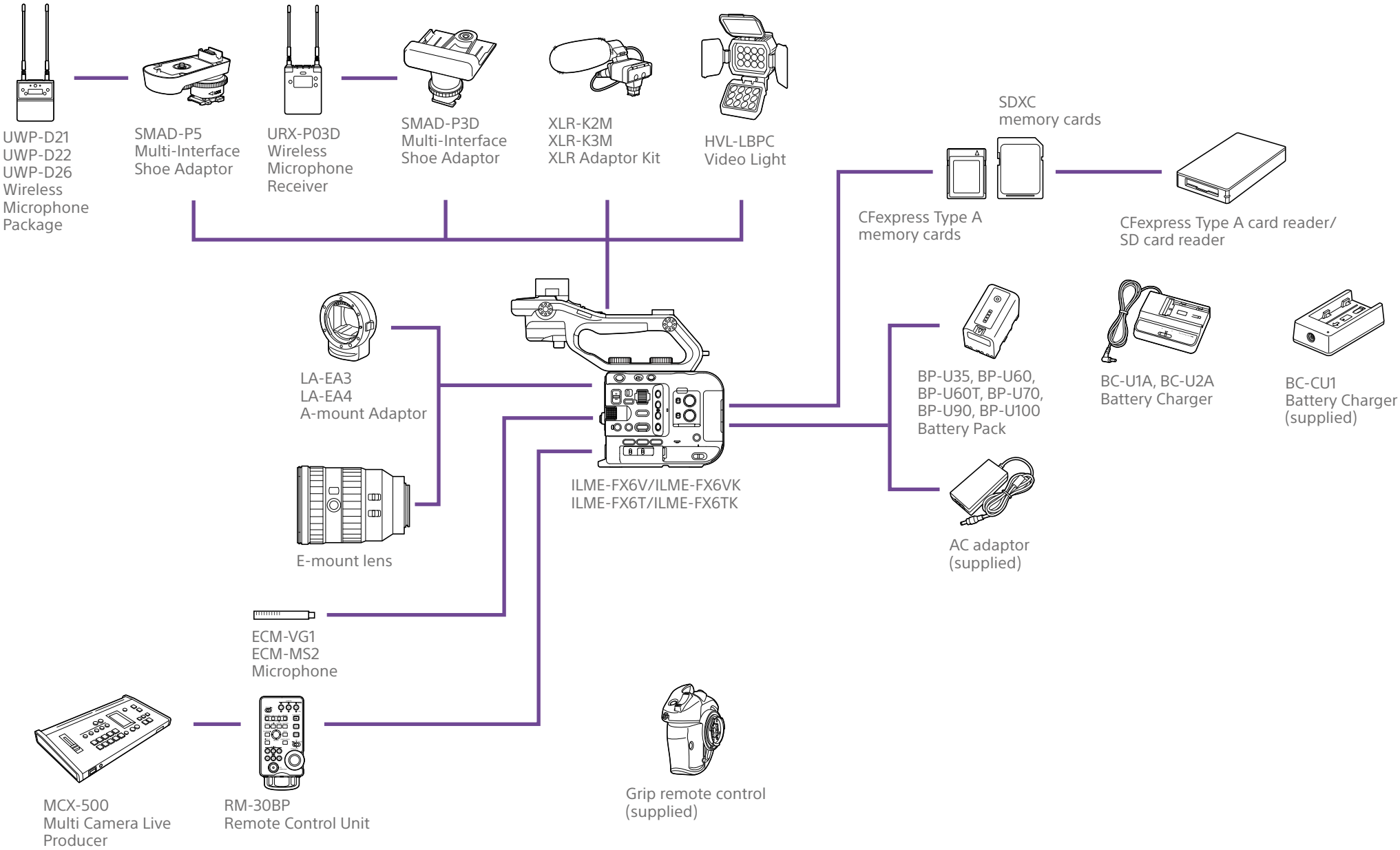

Location and Function of Parts

Left Side and Front Side

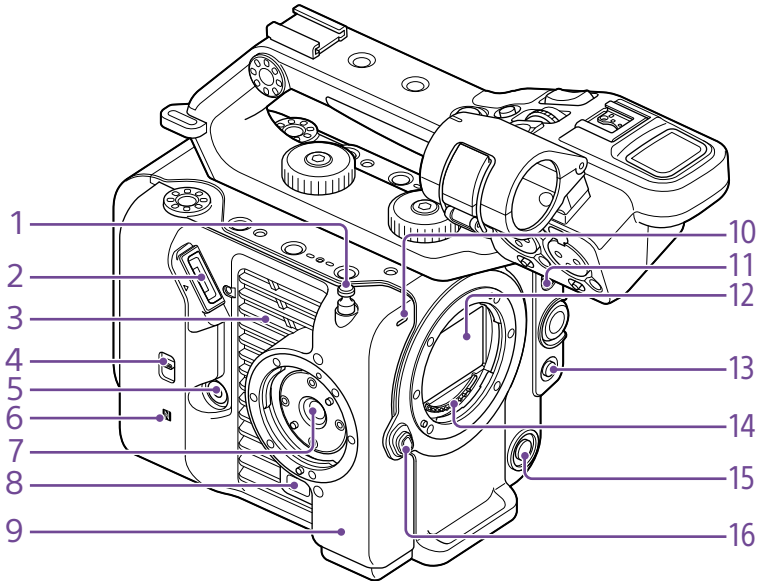

1. **Tape measure hook**
The tape measure hook is on the same plane as the image sensor. To measure the distance between the camcorder and the subject accurately, use this hook as a reference point. You can attach the end of a tape measure to the hook to measure the distance from the subject.
2. **Viewfinder connector (page 19)**
3. **Air vent**

[Note]
Do not cover the air vent.

4. **TC IN/OUT select switch (page 34, 112)**
5. **Grip remote control connector (page 20)**
6. **(N-Mark) (page 59)**
- Touch a smartphone equipped with the NFC function against the unit to establish a wireless connection.
Some smartphones that support wireless pay systems may not support NFC. For details, refer to the operation manual for the smartphone.
- NFC (Near Field Communication) is an international communications protocol for wireless communication between objects in close proximity.

7. **Grip remote control attachment (page 20)**
8. **Grip remote control release button (page 20)**
9. **Wi-Fi antenna**
10. **Recording/tally lamp (front) (page 34)**
Flashes when the remaining capacity on the recording media or battery is low.
11. **FOCUS switch (page 37)**
12. **Image sensor**
13. **PUSH AUTO FOCUS button (page 40)**
14. **Lens signal contacts**

[Note]
Do not touch directly with your hands.

15. **WB SET (white balance set) button (page 46)**
16. **Lens release button (page 22)**

Right Side (Front/Top/Bottom)

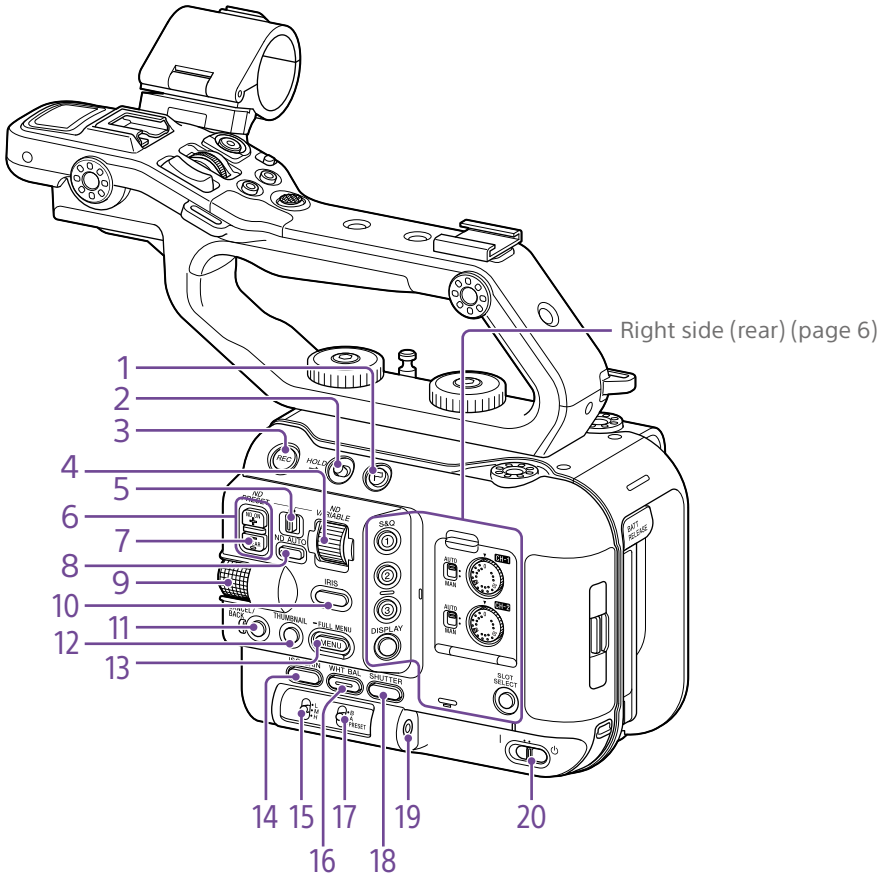

1. **Clip Flag button (page 53, 68)**
2. **HOLD switch (page 97)**
3. **Record START/STOP button (page 34)**
Press the record START/STOP button to start recording. The LED is lit red while recording.
4. **ND VARIABLE dial (page 44)**
5. **ND PRESET/VARIABLE switch (page 44)**
6. **ND FILTER POSITION up/down buttons (page 44)**
7. **ND CLEAR indicator (page 44)**
8. **ND VARIABLE AUTO button (page 44)**
Press the ND VARIABLE AUTO button to start auto density adjustment of the ND filter. The LED is lit green when turned on.
9. **Multi-function dial (page 49)**
Press when viewing the image in the viewfinder to display and operate the direct menu.
Turn the dial when a menu is displayed in the viewfinder to move the cursor up/down to select menu items or settings. Press to apply the selected item.
When the menu is not being displayed, the dial can also function as an assignable dial.
10. **IRIS function button (page 43)**
11. **CANCEL/BACK button (page 67)**
12. **THUMBNAIL button (page 66)**
13. **MENU button (page 13, 71)**
Press the MENU button to display the status screen. Press and hold the MENU button to display the full menu screen. Press the button during status screen or full menu screen display to return to the previous screen display.
14. **ISO/GAIN function button (page 43)**
15. **ISO/GAIN (gain select) switch (page 43)**
16. **WHT BAL (white balance) function button (page 46)**
17. **WHT BAL (white balance memory select) switch (page 46)**
18. **SHUTTER function button (page 44)**
19. **Headphone jack (page 34)**
20. **POWER switch (page 34)**

Right Rear Side and Card Slot

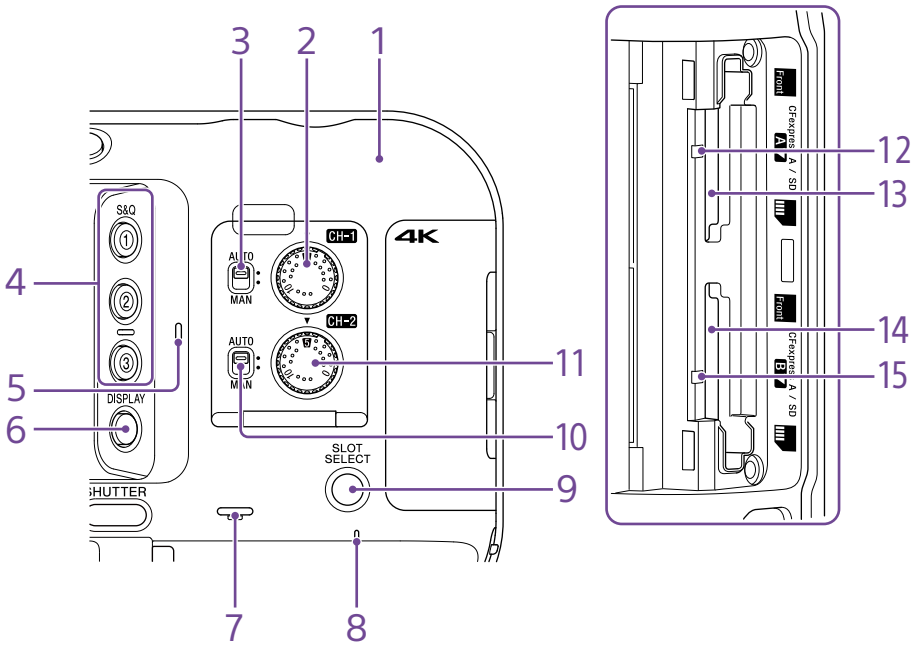

1. Wi-Fi antenna
2. AUDIO LEVEL (CH1) dial (page 47)
3. CH1 (AUTO/MAN) switch (page 47)
4. ASSIGN (assignable) 1 to 3 buttons (page 49)
5. Internal microphone (page 47)
Narration microphone for recording ambient sound.

[Tip]
This microphone is disabled when the handle is attached, and the handle internal microphone becomes active (page 7).

6. DISPLAY button (page 11)
7. Built-in speaker (page 34)
8. POWER indicator (page 34)
9. SLOT SELECT (memory card slot (A)/(B) select) button (page 34)
10. CH2 (AUTO/MAN) switch (page 47)
11. AUDIO LEVEL (CH2) dial (page 47)
12. Access indicator A (page 26)
13. CFexpress Type A/SD card slot (A) (page 26)
14. CFexpress Type A/SD card slot (B) (page 26)
15. Access indicator B (page 26)

Handle, Rear, and Connector Block

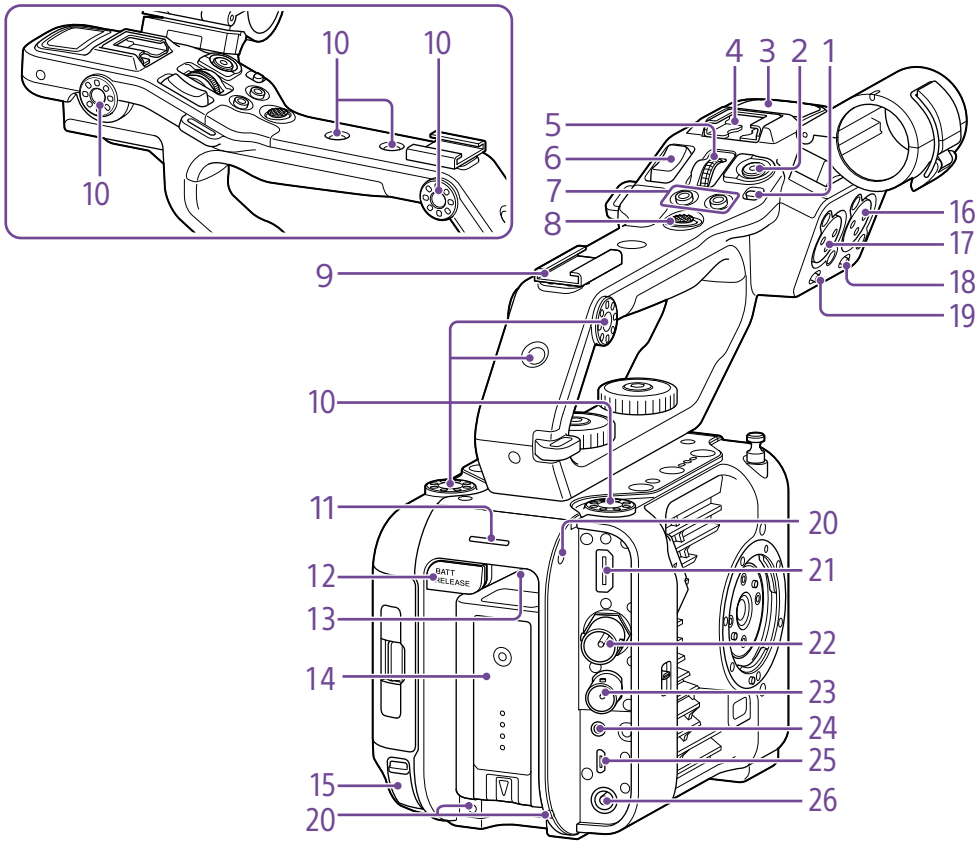

1. **Handle HOLD switch (page 97)**
Use to disable operation of the controls on the handle.

[Tip]
Can also be set for the handle record START/STOP button only.

2. **Handle record START/STOP button**

3. **Handle internal microphone**

4. **Multi-interface shoe**

Multi Interface Shoe

For details about accessories supported by the multi-interface shoe, contact your sales representative.

5. **Handle assignable dial (page 49)**

6. **Handle zoom lever (page 98)**

7. **ASSIGN (assignable) 7 to 8 buttons (page 49)**

8. **Multi selector (8-way D-pad and apply buttons)**

9. **Accessory shoe (page 7)**

10. **Accessory attachment screw holes (1/4 inch)**
Compatible with 1/4-20 UNC screws (length of 6 mm or less).

[Note]
Use of screws longer than 6 mm may damage exterior parts.

11. **Recording/tally lamp (rear) (page 34)**

12. **BATT RELEASE button (page 17)**

13. **Air inlet**

[Note]
Do not cover the air inlet.

14. **Battery pack attachment (page 17)**

15. **USB-C connector (page 62)**

16. **INPUT2 (audio input 2) connector (page 47)**

17. **INPUT1 (audio input 1) connector (page 47)**

18. **INPUT2 (LINE/MIC/MIC+48V) switch (page 47)**

19. **INPUT1 (LINE/MIC/MIC+48V) switch (page 47)**

20. **Screw holes for external devices**
Compatible with M3 screws (length of 4 mm or less).

[Note]
Use of screws longer than 4 mm may damage the exterior surface.

21. **HDMI OUT connector (page 111)**

22. **SDI OUT connector (page 111)**

23. **TC IN/TC OUT (timecode input/output) connector (page 112)**

24. **REMOTE connector**
Connect to general-purpose LANC jack accessory.

25. **USB/multi connector (page 113)**

26. **DC-IN connector (standard DC jack) (page 18)**

Attaching the accessory shoe

1 Lift the front edge of the shoe spring, and pull the spring in the opposite direction to the arrow engraved on the spring.

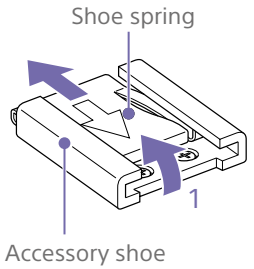

2 Position the accessory shoe on the accessory shoe mount, aligning the protrusions on the shoe with the corresponding points on the mount, and tighten the four screws.

3 Insert the shoe spring in the direction of the arrow so that the U-shaped portion fits onto the end of the accessory shoe.

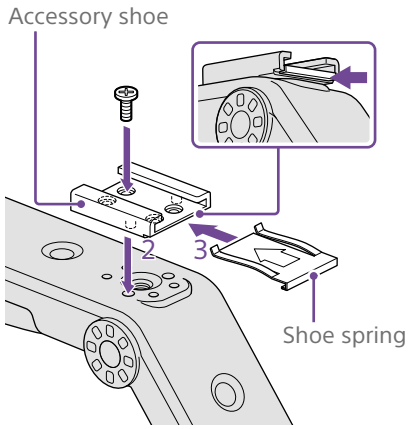

Removing the accessory shoe

Remove the shoe spring as described in step 1 in “Attaching the Accessory Shoe,” unscrew the four screws, and remove the accessory shoe.

Attaching the handle

Position the handle so that the handle connector and screw holes are aligned, push in and turn the handle attachment screws clockwise to attach the handle to the unit. You can also tighten the two handle attachment screws by turning them clockwise using a hex wrench (4 mm).

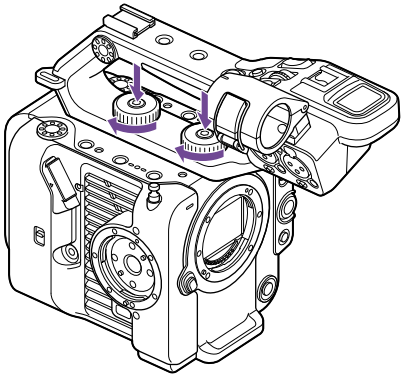

[Note]
Make sure the two handle attachment screws are securely tightened before using the handle. The handle may fall off from the camcorder if the screws are not tightened securely.

Removing the handle

Remove using the reverse of the attachment procedure.

Attaching the handle connector protective cap (supplied)

When using the camcorder with the handle removed, protect the connector using the supplied protective cap.

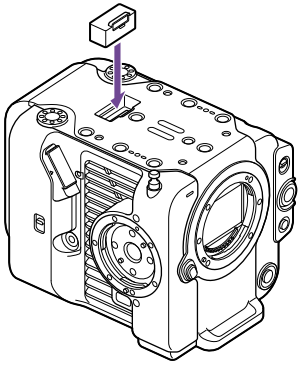

[Tip]
When attaching the handle, stow the supplied protective cap on the bottom of the handle.

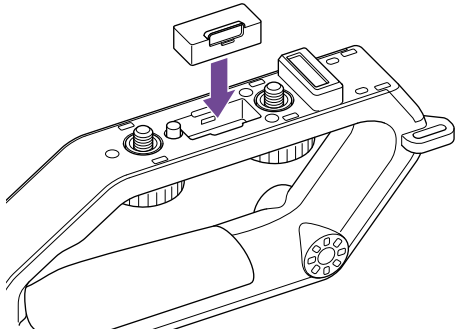

Protecting the connector terminals

Attach the cover to unused connectors to protect the connector terminals.

Top Side

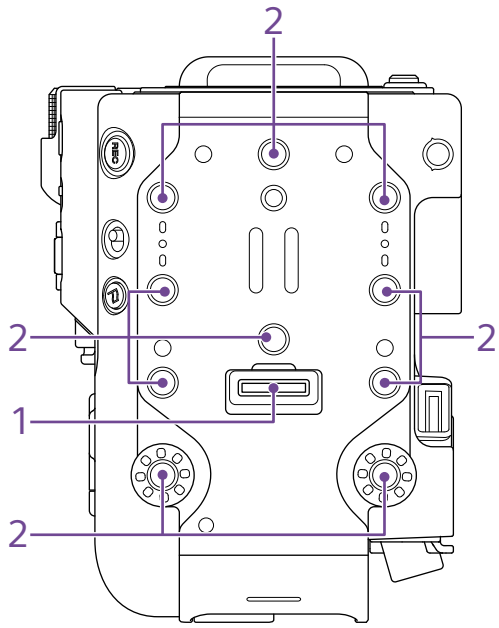

1. **Handle connector**
2. **Accessory attachment screw holes (1/4 inch)**

Compatible with 1/4-20 UNC screws (length of 6 mm or less).

[Note]
Use of screws longer than 6 mm may damage exterior parts.

Bottom Side

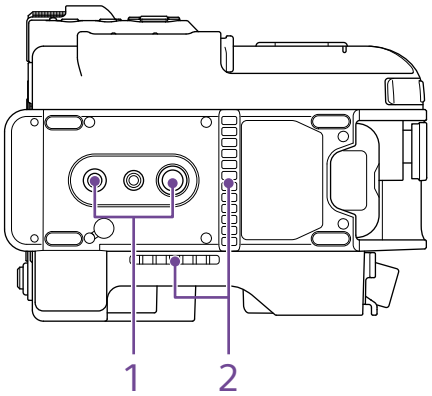

1. **Tripod screw holes (1/4 inch, 3/8 inch)**
Compatible with 1/4-20 UNC screws and 3/8-16 UNC screws. Attach to a tripod (option, screw length of 5.5 mm or less).
2. **Air outlet**

[Note]
Do not cover the air outlet.

Viewfinder

For details about attaching the viewfinder (supplied), see page 19.

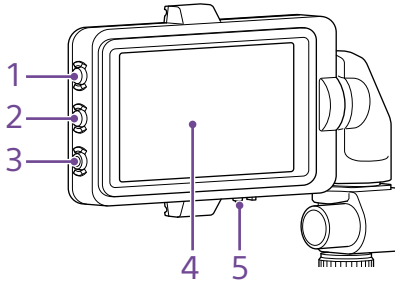

1. **PEAKING button**
2. **ZEBRA button**
3. **ASSIGN (assignable) 9 button (page 49)**
4. **Touch panel**
Touch operations can be disabled using an assignable button or using the menu (page 10).
5. **MIRROR switch**

Grip Remote Control

For details about attaching the grip remote control (supplied), see page 20.

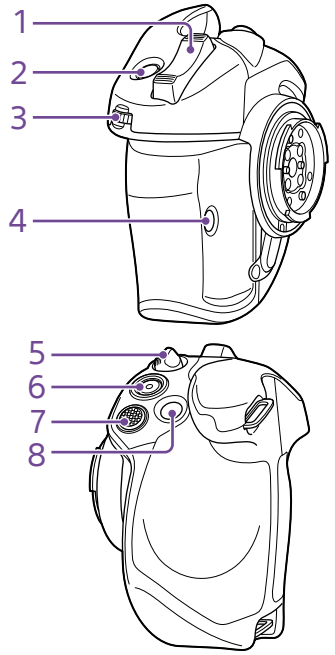

1. **Zoom lever**
2. **ASSIGN (assignable) 4 button (page 49)**
3. **Grip assignable dial (page 49)**
4. **ASSIGN (assignable) 6 button (page 49)**
5. **Grip rotation lever (page 21)**
6. **Record START/STOP button**
7. **Multi selector (8-way D-pad and apply buttons)**
8. **ASSIGN (assignable) 5 button (page 49)**

Using the Touch Panel

Touch Panel Usage Precautions

The viewfinder of the unit is a touch panel, which you operate directly by touch using your finger.

- The touch panel is designed to be touched lightly with your finger. Do not press the panel with force or touch it using sharp-edged or pointed objects (nail, ballpoint pen, pin, etc.).
- The touch panel may not respond when touched in the following circumstances. Also note that these may cause a malfunction.
  - Operation using the tips of finger nails
  - Operation while other objects are touching the surface
  - Operation with a protective sheet or sticker attached
  - Operation with water droplets or condensation on the display
  - Operation using wet or sweaty fingers

Touch Panel Gestures

Tap

Lightly touch an item, such as an icon or menu item, using your finger and then immediately remove your finger.

Drag

Touch the screen and slide your finger to the desired position of the screen, and then remove your finger.

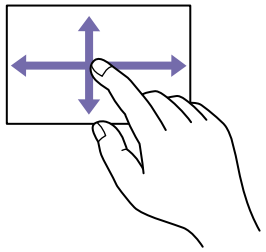

Flick/swipe

Touch the screen and quickly flick/swipe your finger up, down, left, or right.

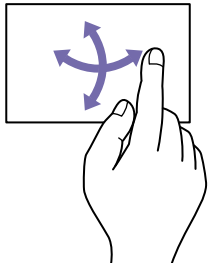

[Tip]

If the display content continues beyond the edges of the screen, you can drag or flick the display content to scroll.

Configuring the Touch Panel

Touch panel operation can be enabled/disabled using Touch Operation (page 97) in the Technical menu.

Screen Display

During shooting (recording/standby) and playback, the camcorder status and settings are superimposed on the image displayed in the viewfinder.
You can show/hide the information using the DISPLAY button. Even when hidden, it will appear while performing direct menu (page 49) operations.
You can also select to show/hide each item independently (page 91).

Information Displayed on the Screen While Shooting

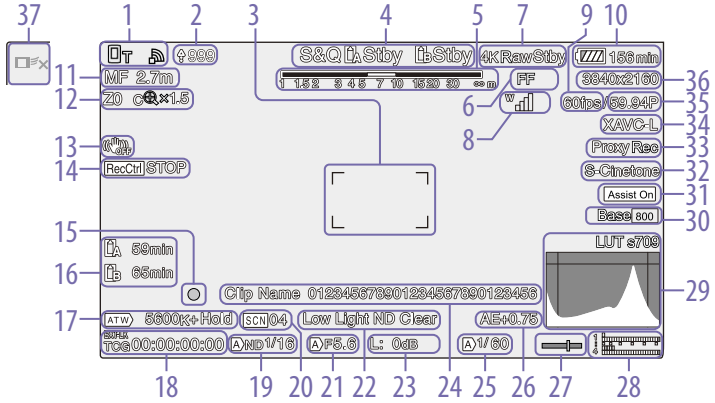

1. Network status indicator (page 13)
Displays the network connection status as an icon.

2. Upload indicator/remaining files indicator (page 64)

3. Focus area indicator (page 38)
Displays the focus area for auto focus.

4. Recording mode, slot A/B, Interval Rec recording interval indicator (page 50)

Display	Meaning
●Rec	Recording
Stby	Recording standby

5. Depth-of-field indicator

6. Imager scan mode indicator (page 24)
A ! mark is displayed if there is a mismatch between the image circle size of the lens and the effective picture size imager scan mode setting.
When Imager Scan Mode is set to FF, a "C" mark is displayed in modes with narrower angle of view (cropped).
Cropping occurs in the following modes.

- When the recording format is 3840×2160 and S&Q Motion frame rate is 100 fps or 120 fps
- When Codec is set to RAW or RAW & XAVC-I and the RAW output format is 3840×2160

7. RAW output operation status indicator (page 58)
Displays the output status of the RAW signal.

8. UWP-D series status indicator (page 13)
Displays the RF level signal strength as an icon when a UWP-D series device is connected to the MI shoe configured for digital audio transfer.

9. Slow & Quick Motion shooting frame rate indicator (page 50)

10. Remaining battery capacity/DC IN voltage indicator (page 17)

11. Focus mode indicator (page 41)

Meaning	Display
Focus Hold mode	Focus Hold
MF mode	MF
AF mode	AF
Realtime tracking AF mode	
Face/eye detection AF (AF/ /Only/ /)	
Face/eye detection icon	
Face/eye detection AF icon	Only
Saved tracking face icon	
AF paused icon during face/eye detection AF[1]	!

1) Displayed when there is no saved tracking face and a face is not detected, or when there is a saved tracking face but the tracking target face is not detected.

12. Zoom position indicator (page 36)
Displays the zoom position in the range 0 (wide angle) to 99 (telephoto) (if a lens that supports zoom setting display is attached).
The display can be changed to a bar indicator or focus distance indicator (page 98).
The following items are added to the display when Clear Image Zoom is enabled.

Display	Meaning
C	Clear Image Zoom is enabled
Magnification value	When using Clear Image Zoom

13. Image stabilization mode indicator

14. SDI output/HDMI output Rec Control status indicator (page 111)
Displays the output status of the REC control signal.

15. Focus indicator (page 37)

16. Remaining media capacity indicator
A icon appears if the memory card is write-protected.

17. White balance mode indicator

Display	Meaning
ATW	Auto mode
ATW Hold	Auto mode paused
W:P	Preset mode
W:A	Memory A mode
W:B	Memory B mode

18. Timecode external lock indicator/time data display (page 34)
Displays "EXT-LK" when locked to the timecode of an external device.

19. ND filter indicator (page 44)

Display	Meaning
A	Auto mode
B	Bokeh control mode (page 53)

20. Scene file indicator (page 55)

21. Iris indicator
Displays the iris position (F value) (if a lens that supports iris setting display is attached).

22. Video level warning indicator

23. Gain indicator (page 43)
Displays the EI value when in Cine EI mode (page 24).

Display	Meaning
A	Auto mode
H	Preset H mode
M	Preset M mode
L	Preset L mode
✿	Temporary adjustment mode
B	Bokeh control mode (page 53)

24. Clip name display (page 66)

25. Shutter indicator (page 44)

26. AE mode/AE level indicator (page 43)

27. Spirit level indicator
Displays the horizontal level in ±1° increments up to ±15°.

28. Audio level meter
Displays the audio level of CH1 to CH4.

29. Video signal monitor (page 52)
Displays a waveform, vectorscope, and histogram.
The orange line indicates the set value of the zebra level.
In Cine EI mode (page 24), it displays the LUT type of the signal being monitored.

30. Base Sensitivity indicator/Base ISO indicator (page 43)
In Custom mode (page 24), it displays the base sensitivity set using Base ISO/Sensitivity on the Main status screen or ISO/Gain/EI >Base Sensitivity in the Shooting menu of the full menu.
In Cine EI mode (page 24), it displays the Base ISO sensitivity set using Base ISO/Sensitivity from the Main status screen or ISO/Gain/EI >Base ISO in the Shooting menu of the full menu.

31. Gamma display assist/monitor LUT indicator
Displays the gamma display assist status. The gamma display assist function can be turned on/off by assigning Gamma Display Assist to an assignable button (page 49).
In Cine EI mode (page 24), it displays the monitor LUT setting (page 79).

32. Base look indicator (page 55)
Displays the base look setting.
In Cine EI mode (page 24), it displays the video signal to record on the memory cards (page 79).

33. Proxy status indicator

34. Recording format (codec) indicator (page 80)
Displays the name of the format for recording on the memory cards.

35. Recording format (frame rate and scan method) indicator

36. Recording format (picture size) indicator (page 80)
Displays the picture size for recording on the memory cards.

37. Realtime tracking AF stop button (page 42)

Information Displayed on the Screen During Playback

The following information is superimposed on the playback picture.

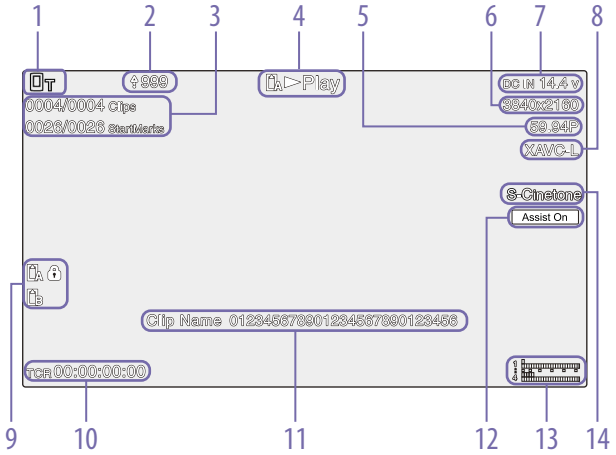

1. Network status indicator

2. Upload indicator/remaining files indicator

3. Clip number/total number of clips

4. Playback status indicator

5. Playback format (frame rate and scan method) indicator

6. Playback format (picture size) indicator

7. Remaining battery capacity/DC IN voltage indicator

8. Playback format (codec) indicator

9. Media indicator
A icon appears if the memory card is write-protected.

10. Time data display

11. Clip name display

12. Gamma display assist indicator

13. Audio level meter
Displays the playback audio level.

14. Base Look indicator

Icon Display

Network connection icon display

Network mode	Connection status	Icon
Access point mode	Operating as an access point	
	Access point operation error	
Station mode	Wi-Fi connection Icon changes according to the signal strength (4 steps)	
	Wi-Fi disconnected (including when establishing connection)	
	Wi-Fi connection error	
USB tethering	USB tethering connected	
	USB tethering disconnected	
	USB tethering error	

UWP-D series icon display

Transmitter status	Receive status	Icon
Power off	Not receiving	
Normal transmit status	Receiving	(receive level (4 steps))
Muting status	Receiving (muted)	
Remaining battery capacity warning status	Receiving	(Icon flashing)
Muting and remaining battery capacity warning status	Receiving	(Icon flashing)

Status Screen

You can check the settings and status of the camcorder on the status screen. The settings of items marked with an asterisk (*) can be changed.
The status screen supports touch operation.

To display the status screen

- Press the MENU button.

[Tip]
You can show/hide each status screen using Menu Page On/Off (page 98) in the Technical menu.

To switch the status screen

- Turn the multi-function dial.
- Push the multi selector up/down
- Swipe the status screen up/down.

To hide the status screen

- Press the MENU button.

To change a setting

With the status screen displayed, press the multi-function dial or multi selector to enable selection of a setup item within a page. Select a page number and then press to switch pages.
You can also select items directly using touch operation.

[Note]
You can disable changes from the status screen by setting Menu Settings >User Menu Only (page 98) in the Technical menu of the full menu to On.

Main Status screen

Displays the main functions of the camera and the free space on the media.

Display item	Description
S&Q Frame Rate*	Slow & Quick Motion shooting and frame rate settings
Frequency/Scan*	System frequency and scanning method settings
Imager Scan*	Scan mode of the image sensor
Media Remain (A)	Remaining free space on media in slot A
ND Filter	ND filter setting
ISO/Gain/EI	ISO/Gain/Exposure Index setting
Base ISO/ Sensitivity*	Base ISO/Base Sensitivity setting
Codec*	Codec setting for recording
Media Remain (B)	Remaining free space on media in slot B
Scene File*	Scene file in use and its File ID setting
Base Look/LUT*	Base Look/LUT setting
Shutter	Shutter speed or shutter angle setting
Iris	Iris setting
Video Format*	Picture size for recording to memory cards
RAW Output Format*	Image size of the RAW output
White Balance	White balance setting

Camera Status screen

Displays the status of various presets of the camera.

Display item	Description
White Switch<B>	White balance memory B setting
White Switch<A>	White balance memory A setting
White Switch<P>	Preset White setting
ND<Preset>	ND filter Preset1 to 3 settings
ISO / Gain[1]<L>*	ISO/Gain[1]<L> setting
ISO / Gain[1]<M>*	ISO/Gain[1]<M> setting
ISO / Gain[1]<H>*	ISO/Gain[1]<H> setting
Base ISO/ Sensitivity*	Base ISO/Base Sensitivity setting
Zebra1*	Zebra1 On/Off setting and level
Zebra2*	Zebra2 On/Off setting and level
VF Gamma/ Gamma	Gamma category and curve
Scene File*	Scene file in use and its File ID setting

1) Exposure Index when Shooting Mode is set to Cine EI.

Audio Status screen

Displays the input setting, audio level meter, and volume monitor setting for each channel.

Display item		Description
CH1	Level Control	Auto adjustment On/Off status
	Level Meter	Audio level meter
	Source*	Input source
	Ref./Sens.*	Input reference level
	Wind Filter*	Microphone wind noise reduction filter setting
CH2	Level Control	Auto adjustment On/Off status
	Level Meter	Audio level meter
	Source*	Input source
	Ref./Sens.*	Input reference level
	Wind Filter*	Microphone wind noise reduction filter setting
CH3	Level Control*	Auto adjustment On/Off status
	Level Meter*	Audio level meter
	Source*	Input source
	Ref./Sens.*	Input reference level
	Wind Filter*	Microphone wind noise reduction filter setting
CH4	Level Control*	Auto adjustment On/Off status
	Level Meter*	Audio level meter
	Source*	Input source
	Ref./Sens.*	Input reference level
	Wind Filter*	Microphone wind noise reduction filter setting
Audio Input Level*		Audio input level (master volume) setting
HDMI Output CH*		HDMI output audio channel setting
Volume*		Headphone/built-in speaker volume setting
Monitor CH*		Monitor channel setting

Project status screen

Displays the basic settings related to the shooting project.

Display item	Description
Frequency/Scan*	System frequency and scanning method settings
Codec*	Codec setting for recording
Rec Function*	Special recording function On/Off setting and main settings
Simul Rec*	2-slot simultaneous recording function On/Off status and setting
Title Prefix	Title portion of the clip name
Imager Scan*	Scan mode of the image sensor
Video Format*	Picture size for recording to memory cards
Picture Cache Rec*	Picture cache recording function On/Off and cache size setting
Number	Numeric suffix of the clip name
Shooting Mode*	Shooting mode settings
RAW Output Format*	Image size of the RAW output
Proxy Rec*	Proxy recording function On/Off setting

Monitoring Status screen

Displays the SDI and HDMI output settings.

Display item		Description
SDI	Signal*	Output picture size
	Info. Disp.*	Output display On/Off setting
	Color Gamut*	Color space setting/ Monitor LUT status
HDMI	Signal*	Output picture size
	Info. Disp.*	Output display On/Off setting
	Color Gamut*	Color space setting/ Monitor LUT status
Stream	Signal	Output picture size
	Info. Disp.	Output display (Off (fixed))
	Color Gamut*	Color space setting/ Monitor LUT status
VF	Color Gamut*	Gamma display assist setting/Color space setting/ Monitor LUT status
Base Look/LUT*		Base Look/LUT setting
Gamma Display Assist*		Gamma Display Assist on/ off setting

Assignable Button Status screen

Displays the functions assigned to each of the assignable buttons.

Display item	Description
1	Function assigned to the ASSIGN 1 button
2	Function assigned to the ASSIGN 2 button
3	Function assigned to the ASSIGN 3 button
4	Function assigned to the ASSIGN 4 button
5	Function assigned to the ASSIGN 5 button
6	Function assigned to the ASSIGN 6 button
7	Function assigned to the ASSIGN 7 button
8	Function assigned to the ASSIGN 8 button
9	Function assigned to the ASSIGN 9 button
Focus Hold Button	Function assigned to the Focus Hold button of the lens
Multi Function Dial	Function assigned to the multi-function dial
Grip Dial	Function assigned to the grip assignable dial
Handle Dial	Function assigned to the handle assignable dial

Battery Status screen

Displays information about the battery and DC IN source.

Display item	Description
Detected Battery	Type of battery
Remaining	Remaining capacity (%)
Charge Count	Number of recharges
Capacity	Remaining capacity (Ah)
Voltage	Battery voltage (V)
Manufacture Date	Date of battery manufacture
Video Light Remaining	Displays the remaining capacity of the video light battery.
Power Source	Power supply source
Supplied Voltage	Supplied power source voltage

Media Status screen

Displays the remaining capacity and remaining recording time of recording media.

Display item	Description
Media A information	Displays the media icon when recording media is inserted in slot A.
Media A remaining capacity meter	Displays the remaining capacity of recording media inserted in slot A expressed as a percentage on a bar graph.
Media A remaining recording time	Displays an estimate of the remaining recording time of the recording media inserted in slot A in units of minutes under the current recording conditions.
Media B information	Displays the media icon when recording media is inserted in slot B.
Media B remaining capacity meter	Displays the remaining capacity of recording media inserted in slot B expressed as a percentage on a bar graph.
Media B remaining recording time	Displays an estimate of the remaining recording time of the recording media inserted in slot B in units of minutes under the current recording conditions.

Network Status screen

Displays the network connection status.

Display item	Description
Wireless LAN	Wireless network settings and connection status
Wired LAN	Wired LAN network settings and connection status
Modem	Wireless network settings and connection status of USB tethering

File Transfer Status screen

Displays file transfer information.

Display item	Description
Auto Upload (Proxy)	Auto Upload (Proxy) function On/Off status
Job Status (Remain / Total)	Remaining number of jobs and total number of jobs
Total Transfer Progress	Transfer progress of all jobs
Default Upload Server	Name of Auto Upload (Proxy) destination server
Current File Transfer Progress	Transfer progress of current file transfer
Current Transferring File Name	Name of file currently being transferred
Server Address	Address of file transfer destination server
Destination Directory	Destination directory of file transfer destination server

Using Touch-enabled Settings Screens

Screen layout

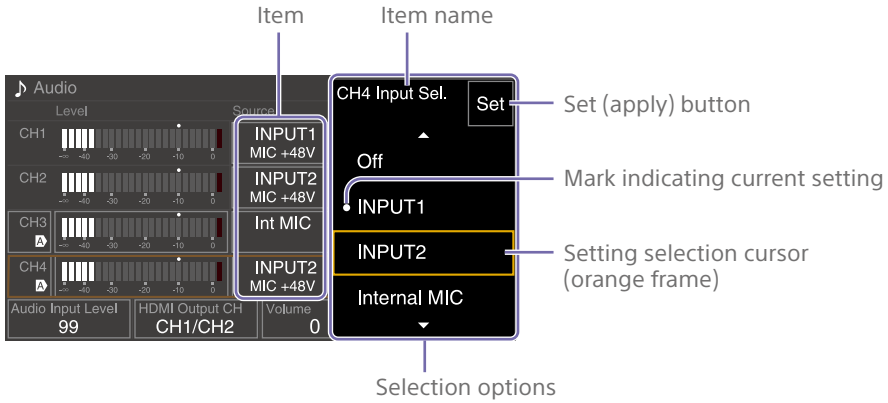

Operation

1 Tap a setup item.

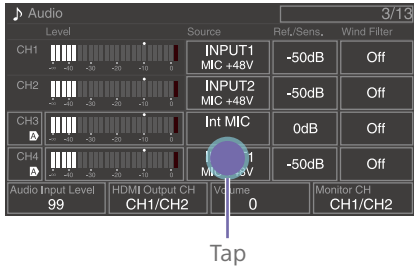

The selection options for the value appear.

2 Drag or flick a setting to select the value.

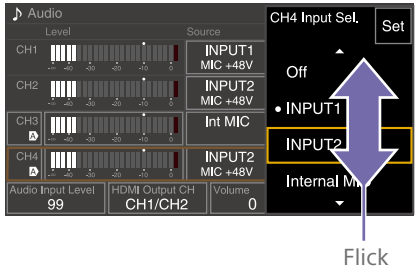

3 Tap the Set button or the value selection cursor.
The value is applied and the display returns to the previous screen.

[Tips]

- Press the CANCEL/BACK button to return to the previous value.
- You can also use the multi-function dial or multi selector.
- Touch operations can also be disabled (page 97).

Power Supply

You can use a battery pack or AC power supply from an AC adaptor.
For safety, use only the Sony battery packs and AC adaptors listed below.

Lithium-ion battery packs
BP-U35 (supplied)
BP-U60
BP-U60T
BP-U70
BP-U90
BP-U100

Battery chargers
BC-CU1 (supplied)
BC-U1A
BC-U2A

AC adaptor (supplied)
[CAUTION]
Do not store battery packs in locations exposed to direct sunlight, flame, or high temperature.

[Notes]
- When operating from an AC power source, use the supplied AC adaptor.
- Always set the POWER switch to the Off position before connecting a battery or AC adaptor. If it is connected with the POWER switch in the On position, the camcorder may be unable to start in some cases. If the camcorder cannot be started, set the POWER switch to the Off position and disconnect the battery pack or AC adaptor temporarily, then wait about 30 seconds before attempting to connect again. (If the AC adaptor is connected while the camcorder is operating from the battery pack, it can be connected with the POWER switch in the On position without problem.)

Using a Battery Pack

To attach a battery pack, plug the battery pack into the attachment (page 7) as far as it will go, and then slide it down to lock it into position.

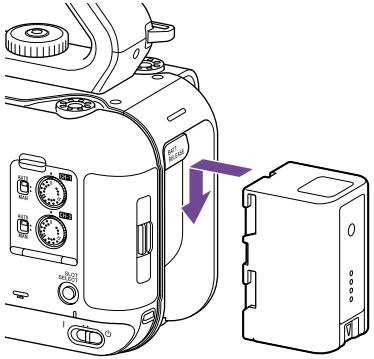

To remove a battery pack, press and hold the BATT RELEASE button (page 7), slide the battery pack up and then pull it out of the attachment.

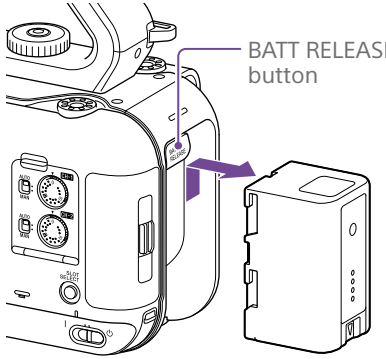

[Notes]
- Before attaching a battery pack, charge the battery using the dedicated BC-CU1, BC-U1A, or BC-U2A battery charger.
- Charging a battery pack while it is warm (for example, immediately after use) may not fully recharge the battery.

Checking the remaining capacity

When shooting/playing using a battery pack, the remaining battery capacity is displayed in the viewfinder (page 11).

Icon	Meaning
	91% to 100%
	71% to 90%
	51% to 70%
	31% to 50%
	11% to 30%
	0% to 10%

The camcorder indicates the remaining capacity by calculating the available time with the battery pack if operation is continued at the current rate of power consumption.

If the battery pack charge becomes low

If the remaining battery charge falls below a certain level during operation (Low Battery state), a low-battery message appears and the recording/tally lamp starts flashing to warn you.
If the remaining battery charge falls below the level at which operation cannot continue (Battery Empty state), a battery-empty message appears.
Replace with a charged battery pack.

Changing the warning levels

The Low Battery level is set to 10% of full battery charge and the Battery Empty level is set to 3% by factory default. You can change the warning level settings using Camera Battery Alarm (page 99) in the Technical menu of the full menu.

To charge the battery pack using the supplied battery charger (BC-CU1)

1 Connect the AC adaptor (supplied) to the battery charger, and connect the power cord (supplied) to an AC power source.

2 Push the battery in and slide it in the direction of the arrow.
The CHARGE lamp lights up orange and charging starts.

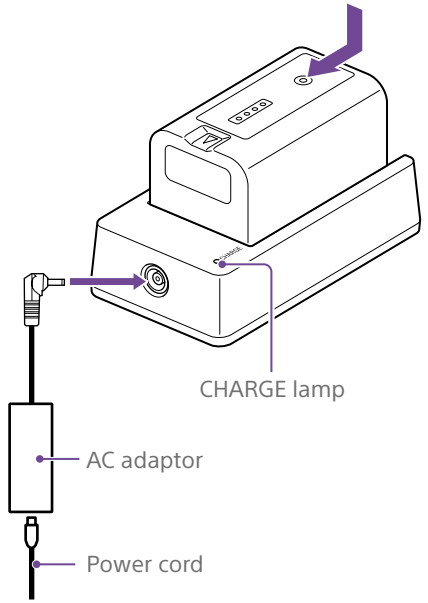

CHARGE lamp (orange)
Lit: Charging
Flashing: Charging error, or temperature is outside the operating range and charging is paused
- When fully charged, the CHARGE lamp of the battery charger turns off.
- Always use genuine Sony batteries.

Charging time

Approximate time (minutes) required when you charge a fully discharged battery pack.

Battery pack	Full charge time
BP-U35	120 minutes

[Note]

If the AC adaptor is disconnected from the battery charger and the battery is left connected to the battery charger, the battery will start to discharge.

Using AC Power

Connecting the camcorder to an AC power source allows use without worrying about the need to recharge the battery pack.

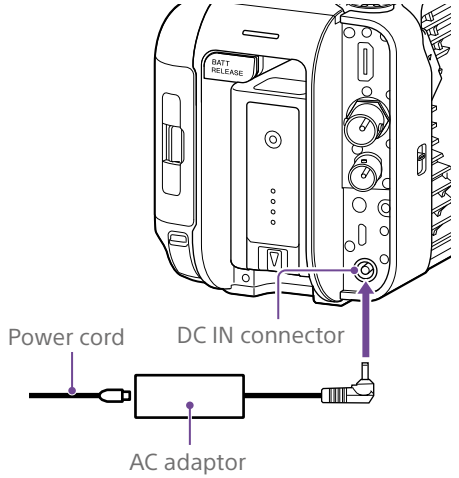

Connect the AC adaptor to the DC IN connector on the camcorder, and connect the power cord (supplied) to an AC power source.

If the output voltage from the AC adaptor becomes low

If the output voltage from the AC adaptor falls below a certain level during operation (DC Low Voltage1 state), a message appears informing you that the AC adaptor output voltage has dropped, and the recording/tally lamp starts flashing.
If the output voltage from the AC adaptor falls below the level at which operation cannot continue (DC Low Voltage2 state), a message appears informing you that the AC adaptor output voltage is too low.
If this occurs, the AC adaptor may be faulty. Check the AC adaptor, as required.

Changing the warning voltages

The DC Low Voltage1 level is set to 16.5 V and the DC Low Voltage2 level is set to 15.5 V by factory default. You can change the warning level settings using Camera DC IN Alarm (page 99) in the Technical menu.

AC adaptor

- Do not connect and use an AC adaptor in a confined space, such as between a wall and furniture.
- Connect the AC adaptor to the nearest AC power source. If a problem occurs during operation, immediately disconnect the power cord from the AC power source.
- Do not short-circuit the metal parts of the plug of the AC adaptor. Doing so will cause a malfunction.
- The battery cannot be charged while attached to the camcorder, even if the AC adaptor is connected.
- When disconnecting the AC adaptor from the unit, grasp the plug and pull it straight out. Pulling on the cable may cause a malfunction.

Attaching Devices

Attaching a Microphone (sold separately)

1 Place the microphone in the microphone holder.

2 Connect the microphone cable to the INPUT1 or INPUT2 connector.

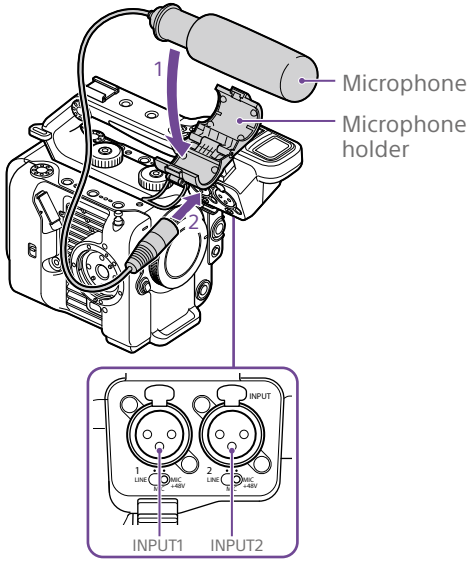

3 Place the microphone cable into the cable holder as shown in the diagram.

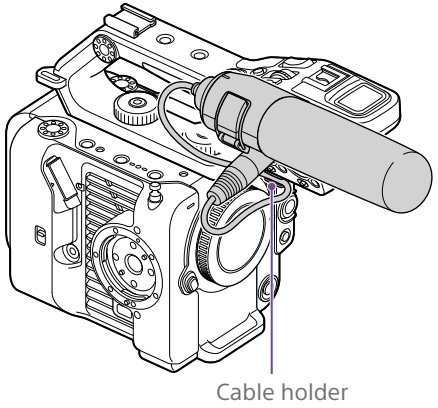

[Tips]
- If you cannot attach the microphone securely, use the spacer supplied with the microphone.
- Depending on the type of lens attached, the tip of the microphone may be visible in the camcorder image. Adjust the position of the microphone.

Attaching the Viewfinder

[Note]
Attach/remove the viewfinder while the camcorder is turned off.

Attaching the viewfinder to the front of the handle

1 Insert the viewfinder mounting clamp adaptor in the viewfinder attachment of the handle (①), and turn the screw (supplied) clockwise to secure it in position (②).
The mounting clamp adaptor can be freely attached in 45° increments, but the position where the attachment point is directly above the screw is recommended.

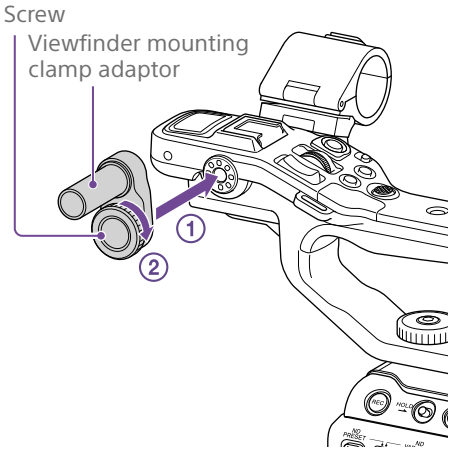

2 Mount the viewfinder clamp onto the viewfinder mounting clamp adaptor (①), and turn the locking knob clockwise to secure it in position (②).

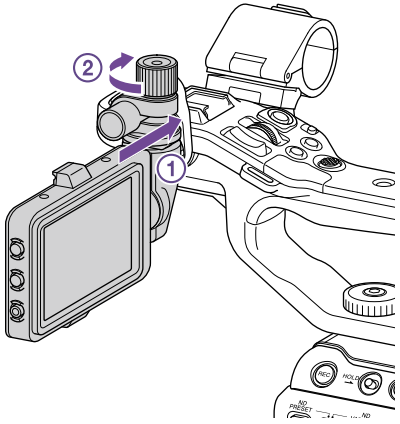

[Note]
Be sure to securely tighten the locking knob when using a viewfinder. The viewfinder may fall off if the locking knob is not tightened securely.

3 Align the ▲ mark on the camcorder with the ▼ mark on the viewfinder connector, and insert the cable.
Make sure that the ▼ mark is the outer side before inserting the connector.

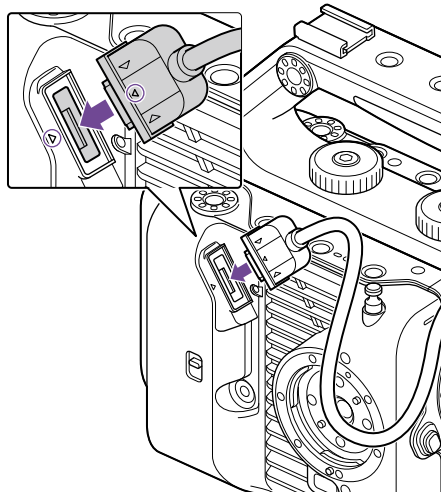

4 Place the cable into the cable holder as shown in the diagram.

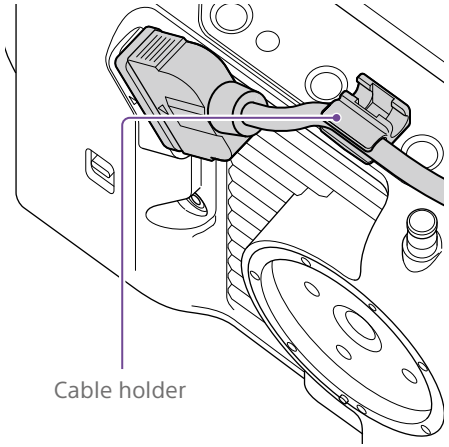

Attaching the viewfinder to the rear of the handle

There are two attachment points each on the rear of the handle (①) and rear of the camcorder (②) for attaching a viewfinder. Attach the viewfinder in the same way described in “Attaching the viewfinder to the front of the handle.”

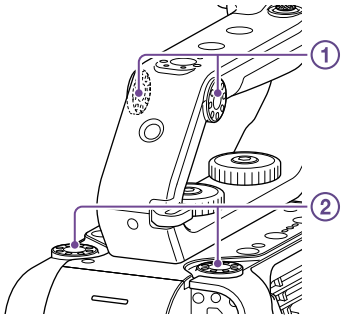

Adjusting the viewfinder position

Tilt the viewfinder up/down/forward/backward to adjust the angle of the viewfinder.
You can use the MIRROR switch to flip the image when viewing from the front of the camcorder, for example.

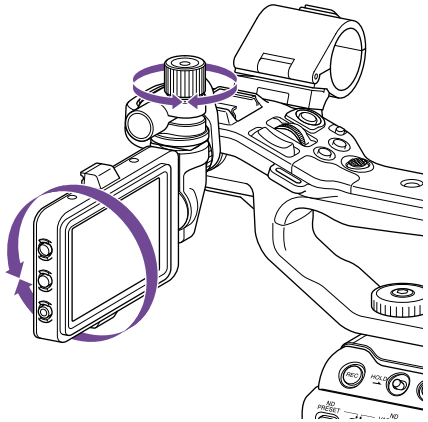

[Tip]
When the unit is not being used or is being transported, it is recommended that the viewfinder be moved to the position in the following diagram to protect the viewfinder.

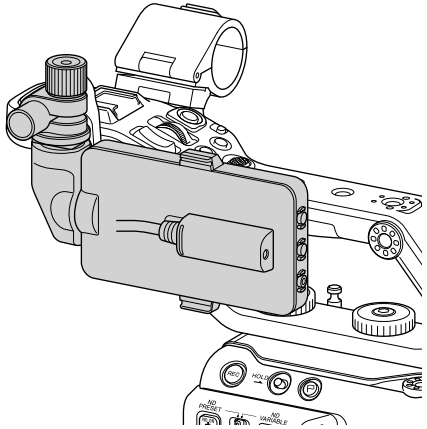

Removing the viewfinder

Loosen the viewfinder locking knob, and use the reverse procedure of attaching the viewfinder.

Attaching the Viewfinder Hood

1 Open the metal clips on the viewfinder hood.

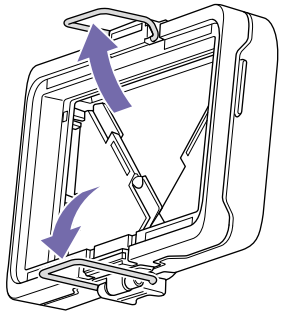

2 Attach the metal clip on the top of the viewfinder hood to the hook on the top of the viewfinder, and attach the metal clip on the bottom of the viewfinder hood to the hook on the bottom of the viewfinder.

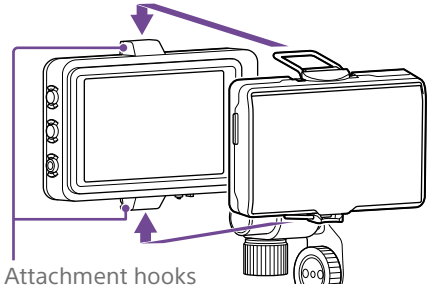

3 Push the lock plate on the bottom of the viewfinder hood in the direction of the arrow to lock the viewfinder hood into position.

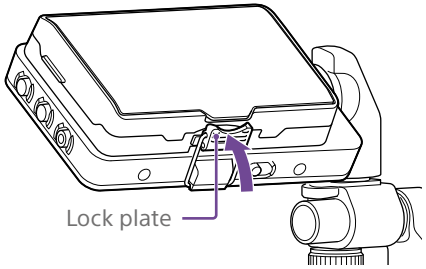

Opening the viewfinder hood

Pull the bottom center of the viewfinder hood out towards you, and then pull up to open the hood.

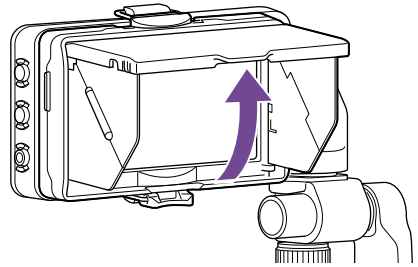

[Note]
When moving the viewfinder, hold the body of the viewfinder and then move it. Do not grasp the viewfinder hood.

Removing the viewfinder hood

Unclip the viewfinder hood lock, and remove the viewfinder hood from the viewfinder.

Attaching the Grip Remote Control

[Note]
Attach/remove the grip remote control while the camcorder is turned off.

1 Connect the cable to the grip remote control connector.

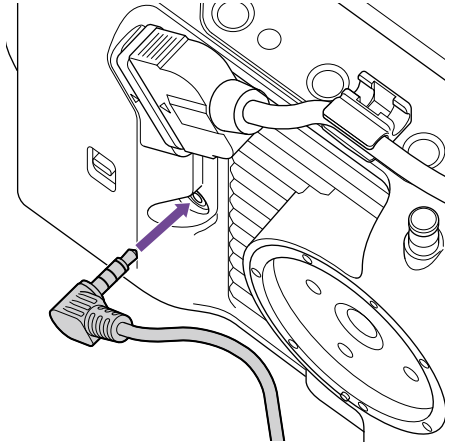

2 Align the grip remote control attachment of the camcorder and the mount index mark on the grip (①), attach the grip to the camcorder, and turn it counterclockwise slowly (②).
A click sound can be heard when it locks into position.

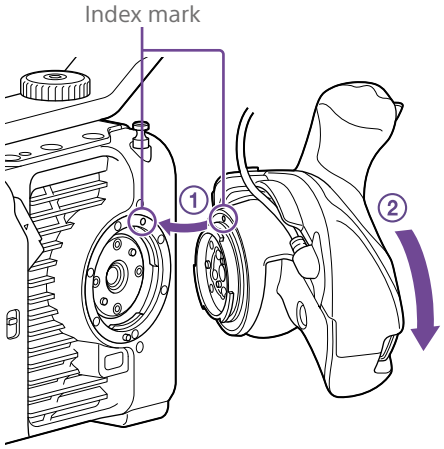

[Note]
If it cannot be attached correctly, re-attach it without applying excessive force to the grip remote controller or the camcorder.

3 Insert the cable connected in step 2 under the slit of the grip remote control as shown in the diagram.

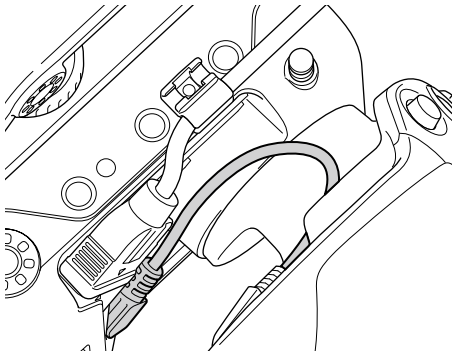

[Note]
If the cable is not placed under the slit, changing the angle of the grip attachment may place excessive force on the cable or the cable may get caught in the rotating mechanism.

Adjusting the angle of the grip remote control

You can adjust the angle of the grip remote control over a range shown in the following diagram to suit your shooting style.

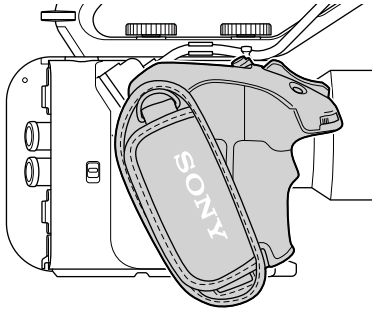

Standard position

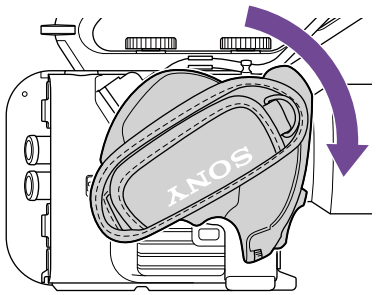

Rotated toward lens (90° max.)

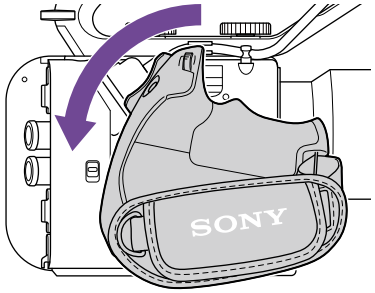

Rotated toward rear (83° max.)

1 Move the grip rotation lever to the position shown in the diagram and rotate the grip while pressing the lever.

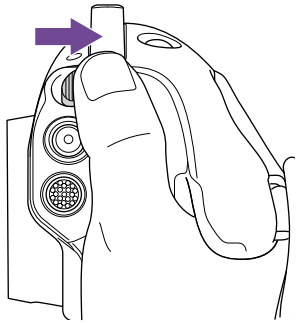

2 Remove your finger from the grip rotation lever near the desired position.

3 Move the grip slightly until you hear a click sound, indicating the grip is secured in position.
When the grip is secured, the grip rotation lever returns to the original position.

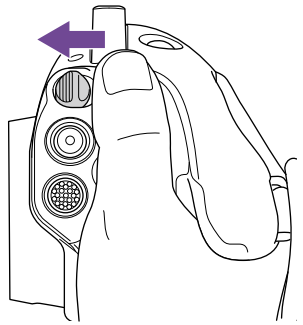

[Notes]
- After changing position, always check that the grip is securely positioned.
- You cannot adjust the angle beyond the adjustment range. Do not use excessive force when rotating the grip.

Holding the grip (recommended method)

There are no rules about how to hold the grip, but the following example shows a way for easy operation of the grip.

When using the ASSIGN 5 button or multi selector

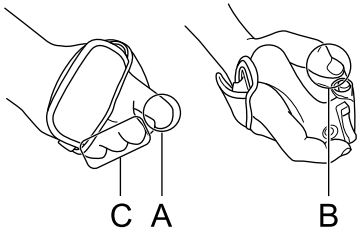

A: Operate the grip assignable dial using your index finger.
B: Operate the multi selector and ASSIGN 5 button using your thumb.
C: Firmly hold the grip using your middle finger, ring finger, and little finger.

When operating the zoom

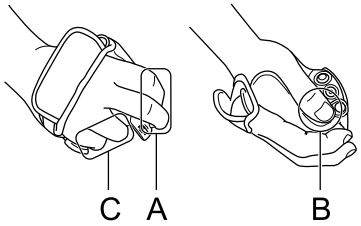

A: Operate the zoom lever using your index finger and middle finger.
B: Firmly hold the grip using your thumb.
C: Firmly hold the grip using your ring finger and little finger.

Removing the grip

[Note]
When removing the grip, be sure to place the camcorder on a flat surface, such as a desk.

1 Disconnect the cable from the grip remote control connector.

2 Press and hold the grip remote control release button of the camcorder, and rotate the grip clockwise until it detaches.

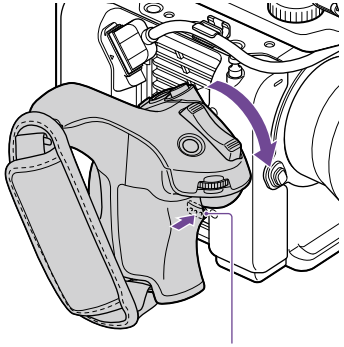

Grip remote control release button

[Tip]
A rosette can be attached to both the grip attachment point on the unit and the corresponding attachment point on the grip.
For details about purchasing rosettes, contact your Sony dealer.
- Camcorder side: 4-546-932- (option)
- Grip side: 4-547-089- (option)
- Attachment screws*
  Camcorder side: 7-627-556- (option)
  Grip side: 7-627-556- (option)

* Four screws are required for each rosette (screw holes are indicated by the circles in the following diagram). Use of screws other than those specified may damage exterior parts.

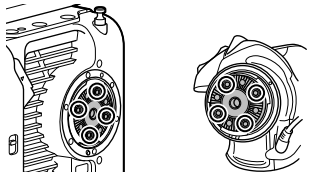

Camcorder side

Grip side

Attaching a Lens

[CAUTION]
Do not leave the lens facing the sun. Direct sunlight can enter through the lens, be focused in the camcorder, and may cause a fire.

[Notes]
- Attach/remove a lens while the camcorder is turned off.
- A lens is a precision component. Do not place the lens on a surface with the lens mount face down. Attach the supplied lens mount cap.

[Tip]
For details about lenses supported by the camcorder, contact your Sony service representative.

Attaching an E-mount lens

1 Remove the lens cap and cover from the camcorder and the lens.

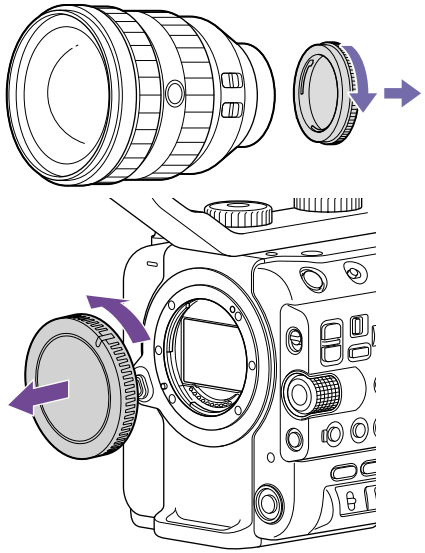

2 Align the lens mount mark (white) with the camcorder, carefully insert the lens, and then turn the lens clockwise.
A click sound can be heard when it locks into position.

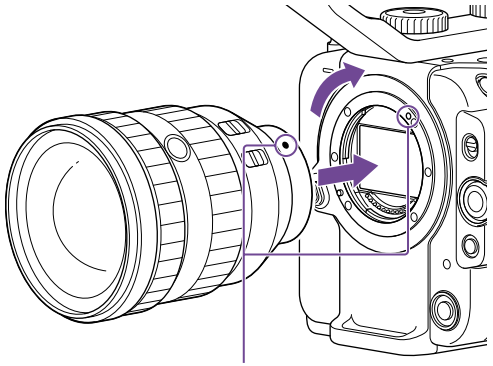

Mount marks (white)

[Note]
Do not press the lens release button when attaching a lens.

Attaching an A-mount lens

To use an A-mount lens, attach a lens mount adaptor (option) and then attach the A-mount lens.

[Note]
When using an A-mount lens, the iris is set manually and focus is set to MF.

Removing a lens

Remove a lens using the following procedure.

1 Press and hold the lens release button and turn the lens counterclockwise while supporting the lens.

2 Pull the lens out in the forward direction.

[Notes]
- When removing a lens, align the mount mark on the lens lock ring with the mount mark on the camcorder.
- Grasp the lens securely in your hand to prevent the lens from falling.
- If another lens will not be attached immediately, always attach the body cap.

Iris adjustments for lenses with Auto Iris switch

- When the lens Auto Iris is set to AUTO, the iris is adjusted automatically and can also be adjusted manually from the camcorder.
- When the lens Auto Iris is set to MANUAL, the iris can only be adjusted using the lens ring. Iris operation from the camcorder has no effect.

Focus adjustments for lenses with focus switch

- When the lens focus switch is set to AF/MF or AF, the focus is adjusted automatically and can also be adjusted manually from a remote control unit.
- When the lens focus switch is set to MF, the focus is adjusted using the lens ring and can also be adjusted manually from a remote control unit.

  [Note]
  When using an A-mount lens, manual adjustment from a remote control unit may not be available.

- When the lens focus switch is set to Full MF, the focus can only be adjusted using the lens ring. Focus operation from the camcorder has no effect.

Attaching to a tripod

Use the tripod screw holes on the camcorder when attaching to a tripod. Using the tripod mount on the lens may cause damage.

Configuring Basic Camcorder Operation

The initial settings screen appears in the viewfinder the first time the camcorder is turned on or after the backup battery has become completely discharged.
Set the date and time of the internal clock using this screen.

Time Zone

Time Zone sets the time difference from UTC (Coordinated Universal Time). Change the setting as required.

Setting the Date and Time

Use the multi selector (page 7) or the multi-function dial (page 5) to select items and settings, then press the multi selector apply button or multi-function dial to apply the settings and start the clock running.
Once the settings screen is closed, you can change the date, time, and time zone settings using Clock Set (page 104) in the Maintenance menu.

[Notes]

- If the clock setting is lost because the backup battery becomes fully discharged due to power being disconnected for an extended period (no battery pack and no DC IN power source), the initial settings screen will be displayed when you next turn the camcorder on.
- While the initial settings screen is displayed, no other operation, except turning the power off, is permitted until you finish the settings on this screen.
- The camcorder has a built-in rechargeable battery for storing the date, time, and other settings even when the camcorder is turned off.

Before shooting, configure the basic operation of the camcorder on the Project status screen to suit the application.

Shooting Mode

You can switch the shooting mode between “Custom mode” to create images flexibly on-site, and “Cine EI mode” (where the camcorder is operated similarly to a film camera, with footage developed in post production).
Set the shooting mode using Shooting Mode (page 14) on the Project status screen.

[Tip]
You can also set the shooting mode using Base Setting >Shooting Mode (page 80) in the Project menu of the full menu.

Custom mode

In Custom shooting mode, you can select the video standard.
You can set the video standard using Base Setting >Target Display (page 80) in the Project menu of the full menu.

- SDR(BT.709): Shooting according to HD broadcast standard
- HDR(HLG): Shooting according to next generation 4K broadcast standard

For details, see page 55.

Cine EI mode

When the shooting mode is set to Cine EI mode, select the base color space for the recording signal and output signal. The color space selected here is the color space of the video output when MLUT is set to Off.
You can set the color space using Cine EI Setting >Color Gamut (page 81) in the Project menu of the full menu.

- S-Gamut3.Cine/SLog3: Easy to adjust color gamut for digital cinema (DCI-P3).
- S-Gamut3/SLog3: Sony wide color gamut that covers the ITU-R BT.2020 color space.

For details, see page 57.

[Notes]

- Cine EI mode has the following limitations.
  - Functions that cannot be adjusted automatically (tracking)
    - White balance
    - Gain
    - Shutter
  - Functions that cannot be configured
    - ISO sensitivity/gain (set to base ISO sensitivity (fixed))
    - Paint/Look menu settings (excluding Base Look)
    - Scene File (disabled)
- The following functions are available in Cine EI mode only (page 57).
  - Exposure Index
  - Monitor LUT

System Frequency

Set the system frequency using Frequency/Scan (page 14) on the Project status screen.
The camcorder may reboot automatically after switching, depending on the selected value.

[Tip]
You can also set the system frequency using Rec Format >Frequency (page 80) in the Project menu of the full menu.

[Note]
You cannot switch the system frequency during recording or playback.

Imager Scan Mode

You can set the effective picture size and resolution of the image sensor.
Set the scan mode using Imager Scan (page 14) on the Project status screen.

- FF: Full-frame size.
- S35: Super 35mm size.

[Tip]
You can also set the scan mode using Rec Format >Imager Scan Mode (page 80) in the Project menu of the full menu.

[Notes]

- You cannot switch the imager scan mode during recording or playback.
- When set to S35, the video format is restricted to 1920×1080.

Codec

Set the codec using Codec (page 14) on the Project status screen.

[Tip]
You can also set the codec using Rec Format >Codec (page 80) in the Project menu of the full menu.

[Note]
You cannot switch the codec during recording or playback.

Video Format

You can set the video format for recording. Set the video format using Video Format (page 14) on the Project status screen.

[Tip]
You can also set the video format using Rec Format >Video Format (page 80) in the Project menu of the full menu.

[Notes]
- You cannot switch the video format during recording or playback.
- Restrictions may apply to the signal from the SDI OUT and HDMI OUT connectors, depending on the video format setting.

Using Memory Cards

The camcorder records audio and video on CFexpress Type A memory cards (available separately) or SDXC memory cards (available separately) inserted in the card slots. The memory cards are also used for proxy recording and storing/loading settings, and when upgrading (software update).

About CFexpress Type A Memory Cards

Use the Sony CFexpress Type A memory cards* listed in “Recommended Media” (page 27) in the camcorder.
For details on operations with media from other manufacturers, refer to the operating instructions for the media or consult the manufacturer’s information.
* Referred to as “CFexpress cards” in this document.

About SDXC memory cards

Use the SDXC memory cards* listed in “Recommended Media” (page 27) in the camcorder.
* Referred to as “SD cards” in this document.

Recommended Media

The guaranteed operating conditions will vary depending on the Rec Format and Recording settings.
Yes: Operation supported
No: Normal operation not guaranteed

Recording format				CFexpress Type A	SDXC						
				VPG400	Class10	U1	U3	VSC V10	VSC V30	VSC V60	VSC V90
RAW Out & XAVC-I	4096×2160 Class300	Normal mode	59.94P	Yes	No	No	No	No	No	No	Yes
			50P	Yes	No	No	No	No	No	No	Yes
			29.97P	Yes	No	No	No	No	No	Yes	Yes
			25P	Yes	No	No	No	No	No	Yes	Yes
			24P	Yes	No	No	No	No	No	Yes	Yes
			23.98P	Yes	No	No	No	No	No	Yes	Yes
	3840×2160 Class300	Normal mode	59.94P	Yes	No	No	No	No	No	No	Yes
			50P	Yes	No	No	No	No	No	No	Yes
			29.97P	Yes	No	No	No	No	No	Yes	Yes
			25P	Yes	No	No	No	No	No	Yes	Yes
			23.98P	Yes	No	No	No	No	No	Yes	Yes
		S&Q (60fps or lower)	59.94P	Yes	No	No	No	No	No	No	Yes
			50P	Yes	No	No	No	No	No	No	Yes
			29.97P	Yes	No	No	No	No	No	No	Yes
			25P	Yes	No	No	No	No	No	No	Yes
			23.98P	Yes	No	No	No	No	No	No	Yes
		S&Q (100fps, 120fps)	59.94P	Yes	No	No	No	No	No	No	No
			50P	Yes	No	No	No	No	No	No	No
			29.97P	Yes	No	No	No	No	No	No	No
			25P	Yes	No	No	No	No	No	No	No
			23.98P	Yes	No	No	No	No	No	No	No

Recording format				CFexpress Type A	SDXC						
				VPG400	Class10	U1	U3	VSC V10	VSC V30	VSC V60	VSC V90
XAVC-I	4096×2160 Class300	Normal mode	59.94P	Yes	No	No	No	No	No	No	Yes
			50P	Yes	No	No	No	No	No	No	Yes
			29.97P	Yes	No	No	No	No	No	Yes	Yes
			25P	Yes	No	No	No	No	No	Yes	Yes
			24P	Yes	No	No	No	No	No	Yes	Yes
			23.98P	Yes	No	No	No	No	No	Yes	Yes
		S&Q (60fps or lower)	59.94P	Yes	No	No	No	No	No	No	Yes
			50P	Yes	No	No	No	No	No	No	Yes
			29.97P	Yes	No	No	No	No	No	No	Yes
			25P	Yes	No	No	No	No	No	No	Yes
			24P	Yes	No	No	No	No	No	No	Yes
			23.98P	Yes	No	No	No	No	No	No	Yes
	3840×2160 Class300	Normal mode	59.94P	Yes	No	No	No	No	No	No	Yes
			50P	Yes	No	No	No	No	No	No	Yes
			29.97P	Yes	No	No	No	No	No	Yes	Yes
			25P	Yes	No	No	No	No	No	Yes	Yes
			23.98P	Yes	No	No	No	No	No	Yes	Yes
		S&Q (60fps or lower)	59.94P	Yes	No	No	No	No	No	No	Yes
			50P	Yes	No	No	No	No	No	No	Yes
			29.97P	Yes	No	No	No	No	No	No	Yes
			25P	Yes	No	No	No	No	No	No	Yes
			23.98P	Yes	No	No	No	No	No	No	Yes
		S&Q (100fps, 120fps)	59.94P	Yes	No	No	No	No	No	No	No
			50P	Yes	No	No	No	No	No	No	No
			29.97P	Yes	No	No	No	No	No	No	No
			25P	Yes	No	No	No	No	No	No	No
			23.98P	Yes	No	No	No	No	No	No	No

Recording format				CFexpress Type A	SDXC						
				VPG400	Class10	U1	U3	VSC V10	VSC V30	VSC V60	VSC V90
XAVC-I	1920×1080 Class100	Normal mode	59.94P	Yes	No	No	No	No	No	Yes	Yes
			50P	Yes	No	No	No	No	No	Yes	Yes
			29.97P	Yes	No	No	Yes	No	Yes	Yes	Yes
			25P	Yes	No	No	Yes	No	Yes	Yes	Yes
			23.98P	Yes	No	No	Yes	No	Yes	Yes	Yes
		S&Q (60fps or lower)	59.94P	Yes	No	No	No	No	No	Yes	Yes
			50P	Yes	No	No	No	No	No	Yes	Yes
			29.97P	Yes	No	No	No	No	No	Yes	Yes
			25P	Yes	No	No	No	No	No	Yes	Yes
			23.98P	Yes	No	No	No	No	No	Yes	Yes
		S&Q (100fps, 120fps)	59.94P	Yes	No	No	No	No	No	No	Yes
			50P	Yes	No	No	No	No	No	No	Yes
			29.97P	Yes	No	No	No	No	No	No	Yes
			25P	Yes	No	No	No	No	No	No	Yes
			23.98P	Yes	No	No	No	No	No	No	Yes
		S&Q (150fps, 180fps)	59.94P	Yes	No	No	No	No	No	No	No
			50P	Yes	No	No	No	No	No	No	No
			29.97P	Yes	No	No	No	No	No	No	No
			25P	Yes	No	No	No	No	No	No	No
			23.98P	Yes	No	No	No	No	No	No	No
		S&Q (200fps, 240fps)	59.94P	Yes	No	No	No	No	No	No	No
			50P	Yes	No	No	No	No	No	No	No
			29.97P	Yes	No	No	No	No	No	No	No
			25P	Yes	No	No	No	No	No	No	No
			23.98P	Yes	No	No	No	No	No	No	No

Recording format				CFexpress Type A	SDXC						
				VPG400	Class10	U1	U3	VSC V10	VSC V30	VSC V60	VSC V90
XAVC-L	3840×2160 420	Normal mode	59.94P	Yes	No	No	Yes	No	Yes	Yes	Yes
			50P	Yes	No	No	Yes	No	Yes	Yes	Yes
			29.97P	Yes	No	No	Yes	No	Yes	Yes	Yes
			25P	Yes	No	No	Yes	No	Yes	Yes	Yes
			23.98P	Yes	No	No	Yes	No	Yes	Yes	Yes
		S&Q (60fps or lower)	59.94P	Yes	No	No	Yes	No	Yes	Yes	Yes
			50P	Yes	No	No	Yes	No	Yes	Yes	Yes
			29.97P	Yes	No	No	No	No	No	Yes	Yes
			25P	Yes	No	No	No	No	No	Yes	Yes
			23.98P	Yes	No	No	No	No	No	No	Yes
		S&Q (100fps, 120fps)	59.94P	Yes	No	No	No	No	No	Yes	Yes
			50P	Yes	No	No	No	No	No	Yes	Yes
			29.97P	Yes	No	No	No	No	No	No	Yes
			25P	Yes	No	No	No	No	No	No	Yes
			23.98P	Yes	No	No	No	No	No	No	No
	1920×1080 HD50	Normal mode	59.94P	Yes	No	No	Yes	No	Yes	Yes	Yes
			50P	Yes	No	No	Yes	No	Yes	Yes	Yes
			29.97P	Yes	No	No	Yes	No	Yes	Yes	Yes
			25P	Yes	No	No	Yes	No	Yes	Yes	Yes
			23.98P	Yes	No	No	Yes	No	Yes	Yes	Yes
		S&Q (60fps or lower)	59.94P	Yes	Yes	Yes	Yes	Yes	Yes	Yes	Yes
			50P	Yes	Yes	Yes	Yes	Yes	Yes	Yes	Yes
			29.97P	Yes	No	No	Yes	No	Yes	Yes	Yes
			25P	Yes	No	No	Yes	No	Yes	Yes	Yes
			23.98P	Yes	No	No	Yes	No	Yes	Yes	Yes
		S&Q (100fps, 120fps)	59.94P	Yes	No	No	Yes	No	Yes	Yes	Yes
			50P	Yes	No	No	Yes	No	Yes	Yes	Yes
			29.97P	Yes	No	No	No	No	No	Yes	Yes
			25P	Yes	No	No	No	No	No	Yes	Yes
			23.98P	Yes	No	No	No	No	No	Yes	Yes

Recording format				CFexpress Type A	SDXC						
				VPG400	Class10	U1	U3	VSC V10	VSC V30	VSC V60	VSC V90
XAVC-L	1920×1080 HD50	S&Q (150fps, 180fps)	59.94P	Yes	No	No	No	No	No	Yes	Yes
			50P	Yes	No	No	No	No	No	Yes	Yes
			29.97P	Yes	No	No	No	No	No	No	Yes
			25P	Yes	No	No	No	No	No	No	Yes
			23.98P	Yes	No	No	No	No	No	No	Yes
		S&Q (200fps, 240fps)	59.94P	Yes	No	No	No	No	No	Yes	Yes
			50P	Yes	No	No	No	No	No	Yes	Yes
			29.97P	Yes	No	No	No	No	No	No	Yes
			25P	Yes	No	No	No	No	No	No	Yes
			23.98P	Yes	No	No	No	No	No	No	Yes
	1920×1080 HD35	Normal mode	59.94P	Yes	Yes	Yes	Yes	Yes	Yes	Yes	Yes
			50P	Yes	Yes	Yes	Yes	Yes	Yes	Yes	Yes
			29.97P	Yes	Yes	Yes	Yes	Yes	Yes	Yes	Yes
			25P	Yes	Yes	Yes	Yes	Yes	Yes	Yes	Yes
			23.98P	Yes	Yes	Yes	Yes	Yes	Yes	Yes	Yes
		S&Q (60fps or lower)	59.94P	Yes	Yes	Yes	Yes	Yes	Yes	Yes	Yes
			50P	Yes	Yes	Yes	Yes	Yes	Yes	Yes	Yes
			29.97P	Yes	No	No	Yes	No	Yes	Yes	Yes
			25P	Yes	No	No	Yes	No	Yes	Yes	Yes
			23.98P	Yes	No	No	Yes	No	Yes	Yes	Yes
		S&Q (100fps, 120fps)	59.94P	Yes	No	No	Yes	No	Yes	Yes	Yes
			50P	Yes	No	No	Yes	No	Yes	Yes	Yes
			29.97P	Yes	No	No	Yes	No	Yes	Yes	Yes
			25P	Yes	No	No	Yes	No	Yes	Yes	Yes
			23.98P	Yes	No	No	No	No	No	Yes	Yes
		S&Q (150fps, 180fps)	59.94P	Yes	No	No	Yes	No	Yes	Yes	Yes
			50P	Yes	No	No	Yes	No	Yes	Yes	Yes
			29.97P	Yes	No	No	No	No	No	Yes	Yes
			25P	Yes	No	No	No	No	No	Yes	Yes
			23.98P	Yes	No	No	No	No	No	Yes	Yes
		S&Q (200fps, 240fps)	59.94P	Yes	No	No	Yes	No	Yes	Yes	Yes
			50P	Yes	No	No	Yes	No	Yes	Yes	Yes
			29.97P	Yes	No	No	No	No	No	Yes	Yes
			25P	Yes	No	No	No	No	No	Yes	Yes
			23.98P	Yes	No	No	No	No	No	No	Yes

Inserting a Memory Card

1 Open the media cover of the card slot section.

2 Insert a memory card.

- For CFexpress cards, the label faces to the left.

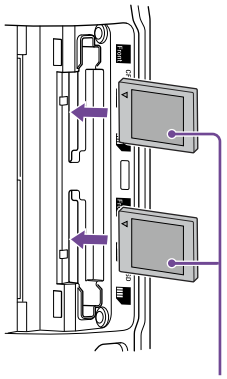

Label

- For SD cards, the label faces to the right with the beveled corner at the bottom.

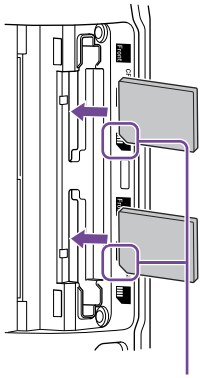

Beveled corner

The access indicator (page 6) is lit red, then changes to green if the card is usable.

[Note]
If the access indicator flashes red continuously and does not change to green, temporarily turn off the camcorder, and remove and reinsert the memory card.

3 Close the media cover.

[Notes]
- The memory card, memory card slot, and image data on the memory card may be damaged if the card is forced into the slot in the incorrect orientation.
- When recording to media inserted in both CFexpress Type A/SD card slots A and B, insert media in both slots that is recommended for operation with the format of the recording.

Ejecting a Memory Card

Open the media cover of the card slot section, and lightly press the memory card in to eject the card.

[Notes]
- If the camcorder is turned off or the memory card is removed while the memory card is being accessed, the integrity of data on the card cannot be guaranteed. All data recorded on the card may be discarded. Always make sure the access indicator is green or off before turning off the camcorder or removing the memory card.
- When removing a memory card immediately after recording is finished, the memory card may be hot, but this does not indicate a problem.

Formatting (Initializing) Memory Cards

If an unformatted memory card or a memory card that was formatted in a different specification is inserted, the message “Media Needs to be Formatted” is displayed in the viewfinder.

Format the card using the following procedure.

1 Select Format Media (page 90) in the TC/Media menu of the full menu.

2 Select Media(A) (slot A) or Media(B) (slot B), then select the formatting method (Full Format or Quick Format).
A confirmation message appears.
- Full Format: Initializes the media completely, including the data region and data management information.
- Quick Format: Initializes the data management information of the media only.

3 Select Execute.
A message is displayed while formatting is in progress, and the access indicator is lit red.
When formatting is completed, a completion message is displayed. Press the multi-function dial to dismiss the message.

[Notes]
- Formatting a memory card erases all data, including recorded video data and setup files.
- Messages may appear during execution depending on the formatting process duration.

If formatting fails

Memory cards not supported by the camcorder cannot be formatted.
A warning message is displayed. Follow the instructions to replace the card with a supported memory card.

To use a card formatted on the camcorder in the slot of another device

First, make a backup of the card, then reformat the card in the device to be used.

Checking the Remaining Recording Time

When shooting (recording/standby), you can monitor the remaining capacity of the memory card in each slot using the slot A/B remaining media indicators in the viewfinder (page 11).
The remaining recording time is calculated from the remaining capacity of the media in each slot and the current video format (recording bit rate), and is displayed in units of minutes.

Memory card replacement timing

- When the total remaining recording time on the two memory cards becomes less than 5 minutes, the message “Media Near Full” appears, the recording/tally lamp starts flashing, and a beep sound (headphone output) will warn you.
  Replace with media that has free space.
- If you continue recording until the total remaining recording time reaches zero, the message changes to “Media Full” and recording stops.

[Note]
Up to approximately 600 clips can be recorded on one memory card.

Restoring Memory Cards

If for any reason an error should occur in a memory card, the card must be restored before use.
When you load a memory card that needs to be restored, a message appears on the viewfinder screen to ask whether you want to restore it.

Restoring a card

Turn the multi-function dial (page 5) to select Execute, then press the multi-function dial.
A message and progress status (%) are displayed while formatting is in progress, and the access indicator is lit red.
When restoration ends, a completion message appears.

If restoration fails

- Memory cards on which memory errors have occurred cannot be restored. A warning message is displayed. Follow the instructions to replace the memory card.
- Memory cards on which memory errors have occurred may become usable if they are reformatted.
- In some cases, some clips can be restored while others cannot. The restored clips can be played normally.

[Notes]
- For restoration of media recorded with this camcorder, be sure to use this camcorder.
- Media recorded with a device other than this camcorder or with another camcorder of different version (even of the same model) may not be restored using this camcorder.
- Clips shorter than 2 seconds cannot be restored.

Basic Operation Procedure

Basic shooting is conducted using the following procedure.

1 Attach the necessary devices, and check that power is being supplied.

2 Insert the memory card(s).

3 Set the POWER switch to the on position.
The POWER indicator turns on, and the camera image appears in the viewfinder.

4 Press the record START/STOP button (page 5).
The recording/tally lamp lights and recording begins.

5 To stop recording, press the record START/STOP button again.
Recording stops, and the camcorder switches to STBY (standby) mode.

[Note]
If the record START/STOP button is pressed within a few seconds after turning the camcorder on, the recording/tally lamp lights up to indicate the unit is in the recording state, but recording to media may not occur for the first few seconds, depending on the selected recording format.

Switching Between Memory Cards

When two memory cards are inserted, press the SLOT SELECT button (page 6) to switch cards.
Recording automatically switches to the second memory card just before the remaining capacity on the first card is reduced to zero (relay recording). You can continue recording continuously when switching memory cards by replacing the memory card that is full with a new memory card.

[Note]
You cannot switch between memory cards during playback mode. Also, continuous playback of a clip spanning media in slot A and slot B is not supported.

Clips (recorded data)

When you stop recording, the video, audio, and accompanying data from the start to the end of the recording are saved as a single "clip" on a memory card.

Clip names

The name of each clip recorded by the camcorder is automatically assigned using the format set in Clip Name Format (page 89) of the TC/Media menu of the full menu.

Maximum clip duration

Up to 6 hours per clip.
The maximum duration of continuous recording is the same as the maximum duration of a clip. If the recording time exceeds the maximum duration of a clip, a new clip is created automatically and recording continues. The new clip appears as a separate clip on the thumbnail screen.

Multiple clips are recorded in succession during relay recording, but recording will stop automatically after approximately 24 hours.

[Notes]
- Do not eject a memory card while recording to it is in progress. When recording, only change memory cards in slots for which the slot access indicator is off.
- When the remaining capacity on the memory card being recorded becomes less than one minute and a recordable memory card is inserted in the other slot, a "Will Switch Slots Soon" message appears. The message disappears after switching memory card slots.
- Relay recording may not operate if recording is started when the remaining memory card capacity is less than one minute. For correct relay recording, check that the remaining memory card capacity is more than one minute before starting recording.
- Video created using the camcorder relay recording function cannot be played back seamlessly on the camcorder.
- To combine video created using the camcorder relay recording function, use "Catalyst Browse" software.

Monitoring Audio

You can monitor the audio that is being recorded using headphones.
Connecting a set of headphones to the headphone jack (page 5) enables you to monitor the audio being recorded. You can also monitor the playback audio (page 67) using the built-in speaker (page 6) or headphones.
You can adjust the volume of the audio to monitor using Volume (page 14) on the Audio Status screen or Audio Output >Volume (page 95) in the Audio menu of the full menu.
You can select the channel to monitor using Monitor CH (page 14) on the Audio Status screen or Audio Output >Monitor CH (page 95) in the Audio menu of the full menu.

Specifying Time Data

Setting the timecode

Set the timecode to record using Timecode (page 89) in the TC/Media menu of the full menu.

Setting user bits

You can add an 8-digit hexadecimal number to the recorded image as user bits. You can also set the user bits to the current time. Set using Users Bit (page 89) in the TC/Media menu.

Displaying time data

Set the timecode to display using TC Display (page 89) >Display Select in the TC/Media menu.
Pressing an assignable button (page 49) with DURATION/TC/U-BIT assigned will switch the display between the timecode, user bits, and duration in sequence.

Switching the timecode input/output

You can switch the timecode input/output using the TC IN/OUT select switch (page 4).
For details, see page 112.

Reviewing the Recording (Rec Review)

You can review the last recorded clip on the screen (recording review).

[Note]
Rec Review is not supported if the video format is changed after recording a clip.

Recording review method

Assign Rec Review to one of the assignable buttons beforehand.
When recording is stopped, press the assignable button (page 49) with Rec Review assigned. Playback of the last recorded clip begins.
The clip is played to the end, Rec Review ends, and the camcorder returns to STBY (standby) mode.

To stop Rec Review

Press the assignable button with Rec Review assigned or press the CANCEL/BACK button.

Recording review settings

You can set the playback start position to one of the following using the Rec Review setting (page 97) in the Technical menu.

- Last 3 seconds of the clip
- Last 10 seconds of the clip
- Start of the clip

[Tip]
If you want to review a specific clip after recording multiple clips, press the THUMBNAIL button to display the thumbnail screen, and select the clip to start playback.

Adjusting the Zoom

You can adjust the zoom according to the shooting conditions.

When a power zoom lens is attached, you can adjust the zoom using the zoom lever on either the grip remote control or the handle. The zoom speed varies with the pressure applied to the lever.
The camcorder is equipped with a zoom function that uses image signal processing called Clear Image Zoom. When Clear Image Zoom is enabled, zoom is supported even for fixed focal distance (prime) lenses. It can also be used to extend the range beyond the optical range on a power zoom lens.
The maximum zoom ratio using Clear Image Zoom varies depending on the recording resolution.

- For QFHD/4K recording resolution: 1.5×
- For HD recording resolution: 2×

Selecting the Type of Zoom

Set the type of zoom using Zoom >Zoom Type (page 97) in the Technical menu of the full menu.
The type of zoom will vary depending on the type of lens that is attached.

Attached lens	Zoom Type setting	
	Optical Zoom Only	On(Clear Image Zoom)
Prime lens/ Manual zoom lens	Zoom operation using the lever is not supported.	Clear Image Zoom is supported.
Power zoom lens	Optical zoom only	Optical zoom and Clear Image Zoom are supported.

[Notes]

- Clear Image Zoom is not available in the following cases.
  - When S&Q Motion >Frame Rate (page 79) in the Shooting menu of the full menu is higher than 60fps
  - When Rec Format >Codec (page 80) in the Project menu of the full menu is set to RAW or an option that includes RAW
- Operating the SERVO/MANUAL select switch on a lens resets the magnification of Clear Image Zoom to 1×.
- When push auto focus (AF-S) is executed during Clear Image Zoom operation, the AF operation gives priority to the area at the center of the screen.

Setting the Handle Zoom

Set the handle zoom setting using Handle Zoom (page 98) in the Technical menu of the full menu.

Setting the Direction of the Zoom Ring

On some E-mount lenses, the direction of rotation of the zoom ring can be reversed.
Set the direction of rotation using Lens >Zoom Ring Direction (page 98) in the Technical menu of the full menu.

Adjusting the Focus

You can adjust the focus automatically or manually according to the shooting conditions.

Adjusting the Focus Manually (Manual Focus)

To adjust the focus manually, set the FOCUS switch (page 4) to the “MAN” position.
This allows you to adjust the focus manually according to the shooting conditions.
Manual focusing is useful for the following types of subjects.

- Subjects on the far side of a window covered in water droplets
- Subjects with low contrast against the background
- Subjects further away than nearby subjects

[Tip]
You can also use auto focus in the following cases when manual adjustment is the main method of operation.

- When the AF subject shift sensitivity is set to 1(Locked)
- When the FOCUS switch is set to the “AF” position
- When operating the focus ring (AF Assist, page 40)

Focusing using touch operation (Spot Focus)

In manual focus mode, you can specify the position where you want to adjust the focus by touching operation.
To use spot focus, set Focus >Touch Function in MF (page 79) in the Shooting menu to Spot Focus.
A spot focus mark is displayed when you tap the position where you want to adjust the focus.

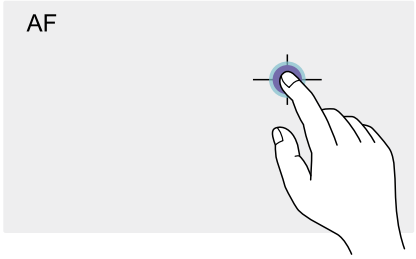

[Tips]

- In spot focus mode, you can press an assignable button (page 49) assigned with Push AF/Push MF to temporarily stop spot focus and enable auto focus while the button is pressed. The focus returns to manual focus when you release the button.
- The Spot Focus function does not operate if the lens is set for manual focusing.
- The spot focus position cannot be specified while the focus is magnified or when Touch Operation (page 97) in the Technical menu is set to Off.

Using auto focus temporarily (Push Auto Focus (AF))

When Focus >Push AF Mode (page 78) in the Shooting menu of the full menu is set to AF, press the PUSH AUTO FOCUS button (page 4) when in manual focus mode to focus automatically while the button is pressed.
Focusing occurs within the focus area set using Focus >Focus Area (page 78) in the Shooting menu of the full menu.
The focus returns to manual focus when you release the button.
This is useful when you want to move the focus slowly from one subject to another subject during manual focus.

[Tip]
The same operation is supported using an assignable button (page 49) assigned with Push AF/Push MF.

[Note]
The Push Auto Focus function does not operate if the lens is set for manual focusing.

Using single-shot auto focus (Push Auto Focus (AF-S))

Set Focus >Push AF Mode (page 78) in the Shooting menu of the full menu to Single-shot AF(AF-S), then set the focus area using Focus >Focus Area(AF-S) (page 78) in the Shooting menu of the full menu.
Press the PUSH AUTO FOCUS button when in manual focus mode to focus automatically at high speed. Focusing stops as soon as you release the button.
The focus status is indicated by the focus indicator.

- On: The focus is fixed at the focus position.
- Flashing: Out of focus. Since focusing is not automatic, change the composition and focus settings to achieve focus.

The focus returns to manual focus when you release the button.
This is useful when you want to quickly focus on a subject before starting to shoot.

[Tips]

- The same operation is supported using an assignable button (page 49) assigned with Push AF/Push MF.
- You can also assign Push AF Mode to an assignable button (page 49).
- You can also assign Focus Area(AF-S) to an assignable button (page 49).
- You can display/hide the focus area frame using Display On/Off >Focus Area Ind.(AF-S) (page 91) in the Monitoring menu of the full menu.
- During focus magnification, the focus adjusts to fit the magnified display position.

[Notes]

- The Push Auto Focus function does not operate if the lens is set for manual focusing.
- The focus area frame is not hidden when using the DISPLAY button.
- During Clear Image Zoom operation, the Focus Area(AF-S) frame position cannot be set. During Push AF-S operation, the AF operation also gives priority to the center portion.

Focusing using magnified view (Focus Magnifier)

By factory default, the Focus Magnifier ×3/×6 function is assigned to the ASSIGN 4 button on the grip remote control and the ASSIGN 7 button on the handle (page 49).
Press the ASSIGN 4 button or ASSIGN 7 button to switch the viewfinder to the focus magnifier screen, with the center magnified by approximately three times. Press the button again to increase the magnification to approximately six times. This function is useful for checking the focus.
Press the button again to return to the normal screen.
You can move the position to be magnified during focus magnification using the multi selector (page 7). Pressing the multi selector returns to the center of the image.
When push auto focus (AF) is used during focus magnification, focusing occurs within the focus area set using Focus >Focus Area (page 78) in the Shooting menu of the full menu.
If push auto focus (AF-S) is used during focus magnification, the focus adjusts to the magnified display position.

[Notes]

- The recorded image or SDI/HDMI output image is not magnified when the focus is magnified.
- During focus magnification, the MENU button and other operations are disabled.
- The magnified position returns to the center of the screen when the camcorder is turned off.

Adjusting the Focus Automatically (Auto Focus)

The camcorder uses phase detection AF for high-speed focusing and contrast AF for high-accuracy focusing.
The combination of these two AF methods provides auto focus with both high speed and high accuracy.
To adjust the focus automatically, set the FOCUS switch (page 4) of the camcorder to the “AUTO” position. If the lens is fitted with a focus selector switch, set the switch to the “AF/MF” or “AF” position. If the switch is set to the “Full MF” or “MF” position, lens focusing cannot be operated from the camcorder (page 23).

[Tip]
When Focus >AF Assist (page 79) in the Shooting menu of the full menu is set to On, you can still use the focus ring on the lens during auto focus to adjust the focus.

[Notes]
- A lens that supports auto focus is required.
- Accuracy may not be obtained depending on the shooting conditions.
- The focus cannot be adjusted automatically on an A-mount lens.

Setting the auto focus area/position (Focus Area)

You can set the target area for auto focus using Focus >Focus Area (page 78) in the Shooting menu of the full menu.

Flexible Spot:
Focuses on a specified position in the image.
When selected, specify the position using the multi selector (page 7).
You can return to the center position by pressing and holding the multi selector.

Zone:
Automatically searches for a focus position within the specified zone.
When selected, specify the position using the multi selector (page 7).
You can return to the center position by pressing and holding the multi selector.

Wide:
Searches for a subject over a wide angle of the image when focusing. A frame is not displayed.

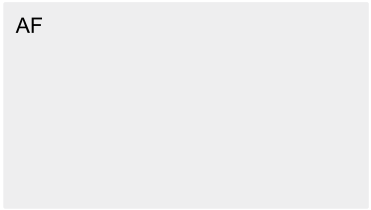

[Tip]
The same operation is supported using an assignable button (page 49) assigned with Focus Area.
You can display/hide the focus area frame using Display On/Off >Focus Area Indicator (page 91) in the Monitoring menu of the full menu.

[Note]
The focus area frame is not hidden when using the DISPLAY button.

Changing the focus area quickly (Focus Setting)

You can change the position and size of the auto focus area quickly during shooting by assigning Focus Setting to an assignable button (page 49).
The operation varies depending on the focus area setting.

When Focus >Focus Area (page 78) in the Shooting menu of the full menu is set to Flexible Spot or Zone
You can change the position of the focus area by pressing an assignable button assigned with Focus Setting and adjusting using the multi selector (page 7).
You can return the position of the focus area to the center while adjusting the position by pressing the multi selector.
You can change the size of the focus area by pressing and holding an assignable button assigned with Focus Setting.
After changing the size, set the position of the focus area by pressing the multi selector.
When finished, press the assignable button assigned with Focus Setting to return to the original screen.

When Focus >Focus Area (page 78) in the Shooting menu of the full menu is set to Wide
You can only change the size of the focus area by pressing and holding an assignable button assigned with Focus Setting. The position can be also be changed by first changing the type to Flexible Spot or Zone.

[Tips]
- When both Focus >Push AF Mode (page 78) in the Shooting menu of the full menu is set to Single-shot AF(AF-S) and the FOCUS switch (page 4) is in the MF position, you can change the Focus Area(AF-S) (page 78) focus area position.
- The focus area frame is displayed orange when the position of the focus area can be changed.

Moving the focus area frame using touch operation (touch focus area)

You can change the position of the focus area by pressing an assignable button (page 49) assigned with Focus Setting to change the focus area display to orange, and then move it using touch operation.
Tap the screen to move the focus area, with the focus area centered on the tapped position. Drag on the screen to move the focus area to the position traced by your finger (page 10).

[Tip]
You can enable/disable touch focus operation on the shooting screen using an assignable button assigned with Focus Setting.

Tap any position

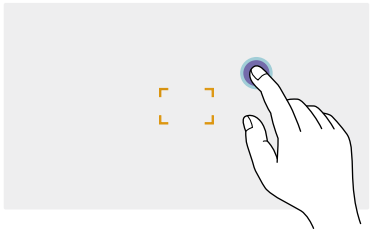

Focus area moves, with the focus area centered on the tapped position.

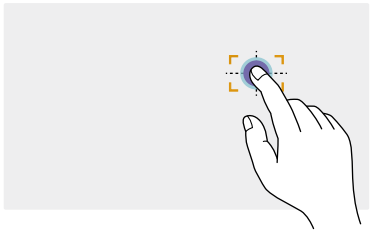

Drag to move the focus area, tracing your finger position

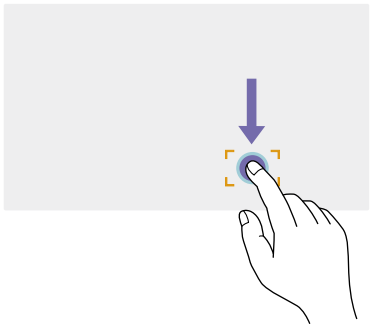

[Notes]

- If you tap a position or drag the focus area to a position that exceeds the setting range, the focus area is set to the top/bottom/left/right edge of the setting range.
- This function is not available in the following circumstances.
  - When Touch Operation (page 97) in the Technical menu of the full menu is set to Off
  - When the focus area is displayed in gray or is not displayed at all

Adjusting the auto focus action (AF transition speed, AF subject shift sensitivity)

AF transition speed

You can set the speed of the focus drive for when the subject changes using Focus >AF Transition Speed (page 78) in the Shooting menu of the full menu.
When set to low speed, the focus moves slowly when the subject to be focused changes, enabling the shooting of impressive images.
When set to high speed, the focus switches between subjects quickly. The subject that enters the frame is immediately focused, making this setting ideal for documentary shooting which requires quick focusing.

Focused on far subject

During the change:
1(Slow): Focus operates slowly
.
.
.
7(Fast): Focus operates rapidly

Focused on near subject

AF subject shift sensitivity

You can set the sensitivity for changing between subjects using Focus >AF Subj. Shift Sens. (page 78) in the Shooting menu of the full menu.
When set to a low sensitivity, the focus does not readily shift even if another subject moves in front of the in-focus subject. When set to a high sensitivity, the focus shifts to give priority to the subject that moves in front.

[Tip]

If AF Speed/Sens. is assigned to an assignable button, the level bars for adjusting values are displayed in the following order each time the button is pressed, allowing you to change the AF transition speed and AF subject shift sensitivity settings.
AF transition speed → AF subject shift sensitivity → No display ...

AF Subj. Shift Sens.: 1(Locked On)

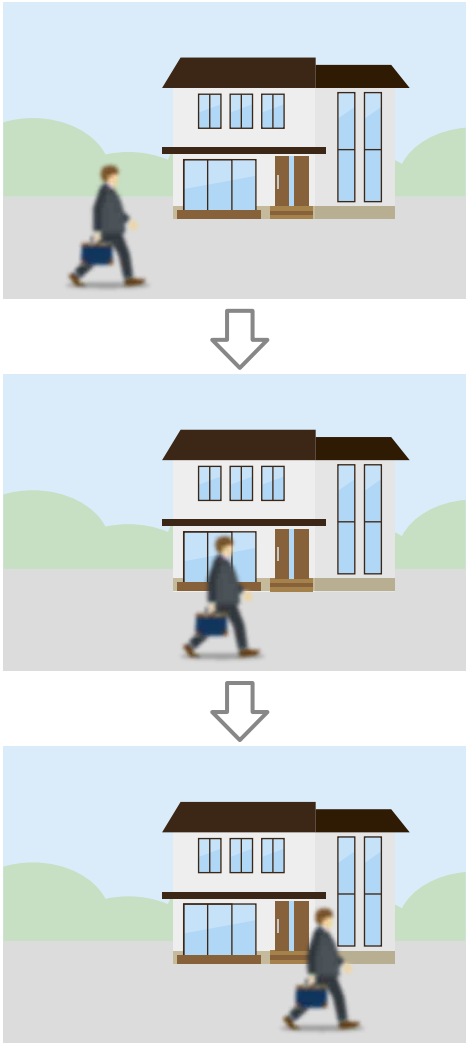

Change focus to another subject slowly

AF Subj. Shift Sens.: 5(Responsive)

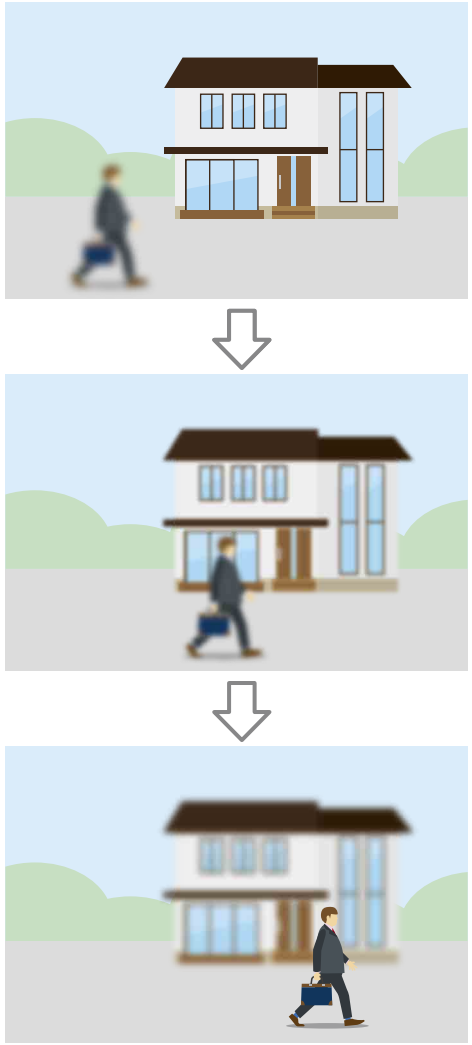

Change focus to another subject rapidly

Changing the focus target manually (AF Assist)

When Focus >AF Assist (page 79) in the Shooting menu of the full menu is set to On, you can still use the focus ring on the lens during auto focus to adjust the focus on a subject.
When you stop using focus ring operation, auto focus continues to focus on the subject focused using the focus ring (AF assist state). After operating the focus ring, moving the focus to another subject is slightly more difficult, regardless of the Focus >AF Subj. Shift Sens. (page 78) setting in the Shooting menu of the full menu.
The AF assist state is canceled by the following.

- When the subject focused using the focus ring is no longer visible
- When switching to manual focus
- When realtime tracking AF is started

[Tips]

- The AF assist state can be canceled quickly by using an assignable button (page 49) assigned with Push AF/Push MF.
- Realtime tracking AF stops when the focus ring is operated.
- In Face/Eye Only AF mode, auto focus focuses on the face closest to the focus position of the focus ring.

Using manual focus temporarily (Push Manual Focus)

Press the PUSH AUTO FOCUS button (page 4) when in auto focus mode to focus manually while the button is pressed. The focus returns to auto focus when you release the button.
This allows you to temporarily stop auto focus and focus manually when something that is not the subject of shooting crosses in front of the subject.

[Tip]

The same operation is supported using an assignable button (page 49) assigned with Push AF/Push MF.

Tracking using Face and Eye Detection (Face/Eye Detection AF)

The camcorder can detect people's faces and eyes as a target to track, and then adjust the focus on faces and eyes within the focus area. This function is available only when the focus mode is AF mode or during push auto focus. When faces are detected, gray face/eye detection frames are displayed. When auto focusing is possible, the frames change to white and tracking starts. When eyes are detected and the focus is adjusted, the face/eye detection frame is displayed on the eyes. When multiple individuals are detected, the main subject is automatically determined.

[Tips]
- When the focus area is set to Zone or Flexible Spot and faces or eyes overlap within the specified focus area, the face/eye detection frames change to white, and the camcorder focuses on those faces/eyes.
- When push auto focus (AF-S) is used, the face/eye detection frames for the faces/eyes that are in focus change to green.

Set the face/eye detection AF action using Focus >Face/Eye Detection AF (page 78) in the Shooting menu.

Face/Eye Only AF:
The camera detects the faces/eyes of subjects (people) and focuses and tracks only on their faces/eyes. While a face or eye is not detected, AF is temporarily stopped and the [!] (Face/Eye Only AF mode auto focus paused) icon (page 11) is displayed. This mode is effective when you want to auto focus and track faces/eyes only.

Face/Eye Priority AF:
The camera detects the faces/eyes of subjects (people) and prioritizes the focusing/tracking on the faces/eyes. When a face or eye is not detected, focusing is in AF mode (default setting).

Off:
The face/eye detection AF function is disabled.

[Notes]
- During push auto focus operation, Face/Eye Priority AF is activated even if Face/Eye Only AF is currently selected.
- When the FOCUS switch is set to MAN, face/eye detection AF is disabled (excluding during push auto focus operation).
- If you turn the camcorder off while Face/Eye Only AF is selected, the mode automatically switches to Face/Eye Priority AF when the camcorder is next turned on.

Hiding face/eye detection frames

You can show/hide face/eye detection frames using Display On/Off >Face/Eye Detection Frame (page 91) in the Monitoring menu of the full menu.

[Note]
Green face/eye detection frames are displayed for faces and eyes that are in focus using push auto focus (AF-S), and are not hidden using the DISPLAY button or when Face/Eye Detection Frame is set to Off.

Switching face/eye detection AF operation using an assignable button

Assign Face/Eye Detection AF to an assignable button (page 49). You can then switch face/eye detection AF operation in the order Face/Eye Priority AF, Face/Eye Only AF, and Off each time you press the button.

Setting using the direct menu

You can also set the face/eye detection AF operation using the direct menu (page 49).

Tracking a Specified Subject (Realtime Tracking AF)

You can maintain focus on a subject by specifying the subject by touch operation or by selecting a face detection frame.
When a subject is selected, a white tracking frame is displayed and tracking starts.

[Tips]
- Tracking occurs over the entire image area, regardless of the focus area setting.
- When Focus >Touch Function in MF (page 79) in the Shooting menu is set to Tracking AF, realtime tracking AF is supported even when the focus mode is MF mode.

The following actions occur for the tracking target, depending on the face/eye detection AF operating mode.

Face/Eye Only AF, Face/Eye Priority AF:
Use for focusing and tracking of a specified subject.
If the tracking target is a person and a face/eye is detected, the camera focuses on that face/eye.
When a tracking target face/eye is detected, the tracking target face is saved. When saved, a ❁ (saved tracking face icon) (page 11) is displayed.

[Note]
If tracking AF is started during manual focus, the tracking target face is not saved.

Off:
Focusing and tracking of the specified subject. Face/eye detection does not occur, even if the tracking target is a person.

[Note]
The Realtime Tracking AF function does not operate if the lens is set for manual focusing.

Starting realtime tracking AF

When a specific subject is specified as the tracking target, tracking of that target starts.

Specifying by touch operation
Tap the target subject to track in one of the following states:
- When the focus mode is MF mode or during push manual focus, and Focus >Touch Function in MF (page 79) in the Shooting menu is set to Tracking AF
- When the focus mode is AF mode or during push auto focus (AF)

[Note]
Specifying a target by touch operation is not available when Touch Operation (page 97) in the Technical menu is set to Off.

Specifying by face detection frame selection

Move the face selection cursor (orange underline) to the target subject to track using the multi selector (page 7), and press the multi selector.

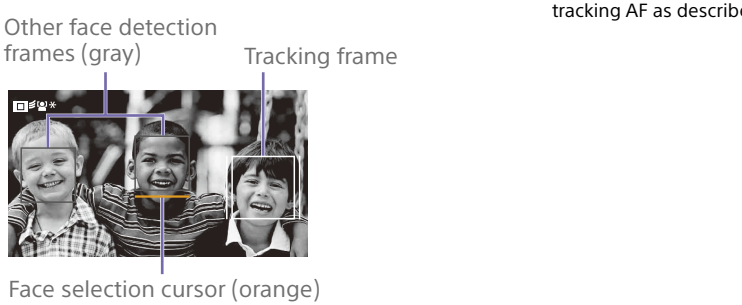

[Tips]

- You can also change the target to track during realtime tracking AF.
- If an assignable button (page 49) assigned with the Focus Magnifier function is pressed during realtime tracking AF, the tracking status is maintained and the focus is magnified. However, you cannot specify a target to track during focus magnification.

[Note]

During manual focus, tracking cannot be started by face detection frame selection.

Stopping realtime tracking AF

Stopping by touch operation

Tap the (Realtime tracking AF stop) button displayed at the top left of the touch panel.

[Tips]

- Realtime tracking AF will stop in the following cases:
  - When the FOCUS switch or AUTO/MAN control on the lens is switched
  - When the focus mode is changed
  - When auto focus assist is executed
  - When the focus area setting or face/eye detection AF action is changed
  - When an assignable button assigned with Push AF/Push MF is pressed
  - When the tracking target is not within the shooting screen or when the subject is out of focus for a few seconds
- When a tracking face is saved (when the "❁" (saved tracking face icon) is displayed), realtime tracking AF will resume when the saved tracking face enters the image area. To clear the tracking face, stop realtime tracking AF as described above.

Adjusting the Brightness

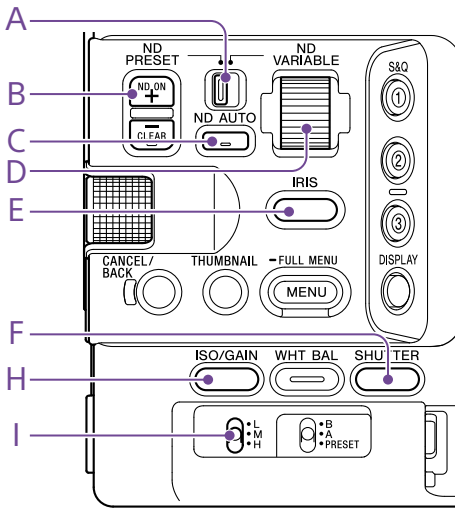

You can adjust the brightness by adjusting the iris, gain, shutter speed, and by adjusting the light level using ND filters. You can also make adjustments automatically.
The target level for automatic brightness adjustment is set using Auto Exposure (page 76) >Level in the Shooting menu of the full menu. You can also assign Auto Exposure Level to an assignable button or assignable dial (page 49).

[Note]
The gain cannot be adjusted in Cine EI mode. The base sensitivity is fixed. Also, the brightness cannot be adjusted automatically using the shutter speed. Brightness auto adjustment using the iris and ND filter is supported.

Selecting the Base Sensitivity

You can select from two types of base sensitivity on the camcorder.
In Custom mode, you can set the base sensitivity to High or Low using Base ISO/ Sensitivity on the Main Status screen (page 13) or the Camera status screen (page 14), or ISO/Gain/EI >Base Sensitivity (page 75) in the Shooting menu of the full menu.
In Cine EI mode, you can set the base ISO to ISO 12800 or ISO 800 using Base ISO/ Sensitivity on the Main Status screen (page 13) or the Camera Status screen (page 14), or ISO/Gain/EI >Base ISO (page 75) in the Shooting menu of the full menu.
Selecting Low or ISO 800 in normal lighting conditions and selecting High or ISO 12800 in low lighting conditions is recommended.

* Can also be configured on the status screen.

[Tip]
You can also assign Base ISO/Sensitivity to an assignable button (page 49).

Adjusting the Iris

You can adjust the iris to adjust the brightness.

Adjusting the iris automatically

This function adjusts the brightness according to the subject. A lens that supports auto iris is required.

1 If a lens with Auto Iris switch is attached, set the switch to AUTO.

2 Press and hold the IRIS function button (E) to display the direct menu (page 49), and select Auto.

[Tip]
You can also assign Auto Iris to an assignable button (page 49).

[Note]
The iris cannot be adjusted automatically on an A-mount lens.

Adjusting the iris manually

1 Press and hold the IRIS function button (E) to display the direct menu (page 49), and select Manual.

2 Press the IRIS function button (E) so that the iris value is displayed on a white background.

3 Turn the multi-function dial to adjust the value.

[Tips]
- You can also operate the multi-function dial as an IRIS dial (page 49) by assigning the IRIS function to the multi-function dial.
- You can also assign the IRIS function to an assignable dial (page 49).

Temporarily adjusting automatically

Press the assignable button (page 49) assigned with the Push Auto Iris function to automatically adjust the iris temporarily while the button is pressed.
The iris returns to the previous setting when you release the button.

[Notes]
- When the Auto Iris switch of the lens is set to MANUAL, the Auto Iris and Push Auto Iris functions on the camcorder have no effect. Manual iris adjustments on the camcorder also have no effect.
- Push Auto Iris cannot be executed when Iris > Bokeh Control (page 76) in the Shooting menu is set to On.

Adjusting the Gain

In Custom mode, you can adjust the gain to adjust the brightness.

Adjusting the gain automatically

Press and hold the ISO/GAIN function button (H) to display the direct menu (page 49), and select Auto.

[Tips]
- You can also perform the same action by setting Auto Exposure (page 76) >AGC in the Shooting menu to On.
- You can also assign AGC to an assignable button (page 49).

Adjusting the gain manually

You can control the gain when you want to adjust the exposure while using a fixed iris setting or when you want to prevent the gain increasing due to AGC.

1 Press and hold the ISO/GAIN function button (H) to display the direct menu (page 49), and select Manual.

2 Set the ISO/GAIN switch (I) to H, M, or L.

[Tips]
- You can change the preset value of each switch position using ISO/Gain<L>/<M>/<H> (page 14) on the Camera Status screen or ISO/Gain/EI >ISO/ Gain<H>/<M>/<L> (page 75) in the Shooting menu of the full menu.
- You can also assign Push AGC to an assignable button, and set AGC to On temporarily by pressing and holding the button.

[Note]
Push AGC cannot be executed when Iris > Bokeh Control (page 76) in the Shooting menu of the full menu is set to On.

Controlling the gain (fine adjustment)

1 Press the ISO/GAIN function button (H) so that the gain value is displayed on a white background.

2 Turn the multi-function dial to adjust the value.

[Tip]
Change the gain preset value according to the ISO/GAIN switch (I) setting.

Controlling the gain temporarily (fine adjustment)

Turn the assignable dial (page 49) assigned with the ISO/Gain/EI function, to adjust the gain value set by the ISO/GAIN switch (I). This is useful when you want to adjust the exposure by one step without changing the depth of field.
The adjusted gain value is canceled by switching the ISO/GAIN switch (I), changing the base sensitivity, setting AGC to On, or turning the power off.

[Tips]
- You can also assign this function to the multi-function dial (page 49).
- You can also assign Push AGC to an assignable button, and set AGC to On temporarily by pressing and holding the button.

[Note]
Push AGC cannot be executed when Iris > Bokeh Control (page 76) in the Shooting menu of the full menu is set to On.

Adjusting the Exposure Index

In Cine EI mode, it is assumed that video output with MLUT set to Off is recorded as the main signal. By changing the brightness of the image with MLUT On to match an EI value, you can check the result of post-production exposure sensitivity adjustment while shooting.
You can change the EI value by setting the ISO/GAIN switch (I) to H, M, or L.

[Tip]
You can change the EI value of each switch position using ISO/Gain/EI (page 14) on the Camera Status screen or ISO/Gain/EI >Exposure Index<H>/<M>/<L> (page 75) in the Shooting menu of the full menu.

Fine adjustment of the exposure index

1 Press the ISO/GAIN function button (H) so that the EI value is displayed on a white background.

2 Turn the multi-function dial to adjust the value.

[Tip]
Change the EI preset value according to the ISO/GAIN switch (I) setting.

Adjusting the Shutter

You can adjust the shutter to adjust the brightness.

Adjusting the shutter automatically

Press and hold the SHUTTER function button (F) to display the direct menu (page 49) and select Auto to adjust the shutter speed or shutter angle automatically in response to the image brightness.

[Tip]
You can also perform the same action by setting Auto Exposure > Auto Shutter (page 77) in the Shooting menu of the full menu to On.

Adjusting the shutter manually

1 Press and hold the SHUTTER function button (F) to display the direct menu (page 49), and select Speed or Angle.

2 Press the SHUTTER function button (F) so that the shutter value is displayed on a white background.

3 Turn the multi-function dial to adjust the shutter speed.

[Tips]
- To adjust the exposure time to match the frame interval, select Off in step 1.
- You can also set the angle and adjust the frequency (page 75).

Adjusting the Light Level (ND Filter)

In conditions where the lighting is too bright, you can set the appropriate brightness by changing the ND filter.
The camcorder features two ND filter modes. You can switch between the two modes using the ND PRESET/VARIABLE switch.

Adjusting in preset mode

Set the ND PRESET/VARIABLE switch (A) to the PRESET position, and set the ND FILTER POSITION up/down buttons (B) to one of the following settings.
Clear: No ND filter
1: Transmittance set by ND Filter >Preset1 (page 75) in the Shooting menu of the full menu.
2: Transmittance set by ND Filter >Preset2 (page 75) in the Shooting menu of the full menu.
3: Transmittance set by ND Filter >Preset3 (page 75) in the Shooting menu of the full menu.

Adjusting in variable mode

Set the ND PRESET/VARIABLE switch (A) to the VARIABLE position. Switch the ND FILTER POSITION up/down buttons (B) between CLEAR and On.

Adjusting the light level automatically

You can set Auto ND Filter to On to enable auto exposure adjustment using the ND filter.

1 Press the [+] button of the ND FILTER POSITION up/down buttons (B) to turn ND filter operation on.

2 Press and hold the ND VARIABLE AUTO button (C) until Auto is selected.

Adjusting the light level manually

1 Press the [+] button of the ND FILTER POSITION up/down buttons (B) to turn ND filter operation on.

2 Press and hold the ND VARIABLE AUTO button (C) until Manual is selected.

3 Turn the ND VARIABLE dial (D) to adjust the transmittance of the filter.

[Tip]
You can also assign the ND Filter function to an assignable dial (page 49).

Temporarily adjusting automatically

You can assign Push Auto ND to an assignable button (page 49), and temporarily set Auto ND Filter to On by pressing and holding the button. Releasing the button sets Auto ND Filter back to Off.
Press the [+] button of the ND FILTER POSITION up/down buttons (B) to turn ND filter operation on.

[Notes]
- When the ND filter is switched to or from CLEAR during shooting, the ND filter frame is displayed on the image and the operating sound is included in the audio.
- Push Auto ND cannot be executed when Iris > Bokeh Control (page 76) in the Shooting menu is set to On.

[Tips]
- You can set to CLEAR by turning the ND VARIABLE dial (D) down from ND1/4. Turning the dial up from CLEAR sets ND1/4. You can disable this action using ND Dial >CLEAR with Dial (page 97) in the Technical menu of the full menu.
- You can also assign ND Filter Position to an assignable button (page 49), and press the button instead of using the ND FILTER POSITION up/down buttons to change the setting.
  Preset mode: Clear → Preset1 → Preset2 → Preset3 → Clear...
  Variable mode: Clear → On → Clear...
- You can also assign Auto ND Filter to an assignable button (page 49), and press the button to switch Auto ND filter between On and Off.
- When shooting a brightly lit subject, closing the iris too much may cause diffraction blur, producing an image starting to go out of focus (typical phenomena in video cameras). You can suppress this effect to obtain better shooting results using the ND filter.

Adjusting for Natural Colors (White Balance)

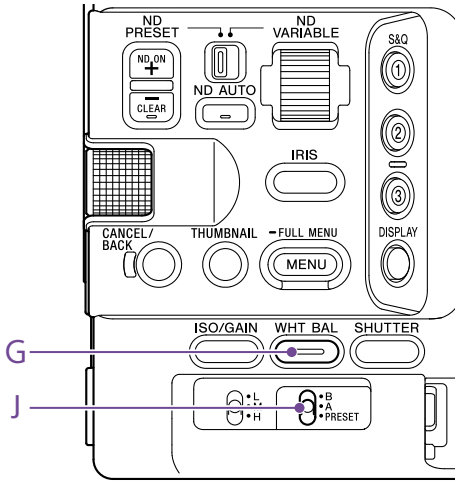

You can select the adjustment mode to suit the shooting conditions.

ATW (Auto Tracing White Balance)

This function adjusts the white balance automatically to an appropriate level.
The white balance is automatically adjusted when the color temperature of the light source changes.
Press and hold the WHT BAL function button (G) to display the direct menu (page 49) and select ATW.
You can select the speed of adjustment (five steps) using White Setting >ATW Speed (page 78) in the Shooting menu of the full menu.

[Tip]
You can freeze the current white balance setting by assigning the ATW Hold function to an assignable button (page 49), and pressing the assignable button to temporarily pause ATW mode.

[Notes]
- ATW cannot be used in Cine EI mode.
- It may not be possible to adjust to the appropriate color using ATW, depending on the lighting and subject conditions.
  Examples:
  – When a single color dominates the subject, such as sky, sea, ground, or flowers.
  – When the color temperature is extremely high or extremely low.
  If the appropriate effect cannot be obtained because the ATW auto tracking speed is slow or for other reasons, run auto white balance.

Adjusting the White Balance Manually

1 When white balance is set to ATW mode, press and hold the WHT BAL function button (G) to display the direct menu (page 49), and select W:P, W:A, or W:B.

2 Select B, A, or PRESET using the WHT BAL switch (J).
B: Memory B mode
A: Memory A mode
PRESET: Preset mode

[Tip]
ATW can be enabled for memory B by setting White Setting >White Switch<B> (page 78) in the Shooting menu of the full menu to ATW.

Memory A/Memory B mode

This mode adjusts the white balance to the setting saved in memory A or B, respectively.

Preset mode

This mode adjusts the color temperature to a preset value (factory default is 3200K).

Changing the default preset value

In preset mode, you can change an existing preset value directly.
Press and hold the WHT BAL function button (G) and select one of the following in the direct menu.
Custom mode: → 3200K, → 4300K, → 5600K, → 6300K
Cine EI mode: → 3200K, → 4300K, → 5500K

[Tip]
You can also assign Preset White Select to an assignable button (page 49), and press the button to change the setting.
Custom mode: 3200K → 4300K → 5600K → 6300K → 3200K...
Cine EI mode: 3200K → 4300K → 5500K → 3200K...

Changing the color temperature

1 Press the WHT BAL function button (G) so that the color temperature value is displayed on a white background.

2 Turn the multi-function dial to adjust the value.

[Tips]
- In preset mode, you can set the value in 100K units.
- In memory mode, you can set the value in 20K increments in the range 2000K to 5600K. Values above 5600K can be set at intervals equal to the amount of color change (mired) from 5580K to 5600K. You can also adjust the tint value using White (page 77) >Tint in the Shooting menu of the full menu.

Running auto white balance

The white balance to save in memory A/ memory B mode is configured automatically.

1 Select memory A mode or memory B mode.

2 Place white paper (or other object) in a location with the same lighting source and conditions as the subject, then zoom in on the paper to show white on the screen.

3 Adjust the brightness.
Adjust the iris using the procedure in “Adjusting the iris manually” (page 43).

4 Press the WB SET button (page 4).
- If auto white balance is run in memory mode, the result of auto adjustment is saved in the memory (A or B) selected in step 1.
- If auto white balance is run in ATW mode, the result is inherited and ATW resumes when the auto adjustment ends. This is useful when you want to adjust the white balance very quickly, regardless of the ATW Speed setting.

[Note]
If the adjustment is not successful, an error message is displayed on the screen for about three seconds. If the error message persists after repeated attempts to set white balance, contact your Sony service representative.

Setting the Audio to Record

You can specify the audio to be recorded using the input connectors, switches, and dials of the camcorder.

External audio input connectors and selector switches

INPUT1 connector (page 7)
INPUT2 connector (page 7)
Multi-interface shoe (page 7)
INPUT1 (LINE/MIC/MIC+48V) switch (page 7)
INPUT2 (LINE/MIC/MIC+48V) switch (page 7)

Switches for setting the audio level

CH1 (AUTO/MAN) switch (page 6)
CH2 (AUTO/MAN) switch (page 6)
AUDIO LEVEL (CH1) dial (page 6)
AUDIO LEVEL (CH2) dial (page 6)

Audio Status screen

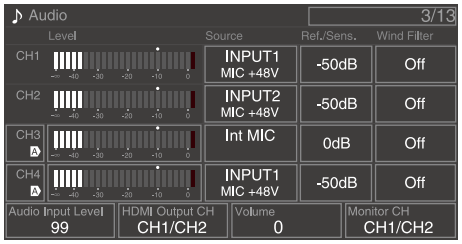

Selecting the Audio Input Device

1 Set the audio input using CH1/CH2/CH3/CH4 >Source (page 14) on the Audio Status screen or Audio Input >CH1 Input Select to CH4 Input Select (page 94) in the Audio menu of the full menu.
If using a microphone or XLR adaptor connected to the multi-interface shoe, specify Shoe CH1 or Shoe CH2. For details about the XLR adaptor, see "Adding Audio Input Connectors" (page 48).

[Notes]

- Audio is not recorded in Interval Rec mode or Slow & Quick Motion mode.
- The camcorder has a built-in narration microphone for recording ambient sound. It can be used for syncing the timing with other equipment. In such cases, specify Internal MIC.
- Only the handle internal microphone (page 7) becomes active for recording audio when the handle is attached. When the handle is not attached, the narration microphone (page 6) for recording ambient sound can be used.
- When CH1 Input Select and CH2 Input Select are set to Internal MIC, the audio recording level of both CH1 and CH2 is adjusted using the AUDIO LEVEL(CH1) dial (page 6). When CH3 Input Select and CH4 Input Select are set to Internal MIC, the audio recording level of both CH3 and CH4 is adjusted using CH3 Input Level (page 94).

2 Select the input audio source.
Set the INPUT1/INPUT2 (LINE/MIC/MIC+48V) switches to the devices connected to the INPUT1/INPUT2 connectors, respectively.

Connected device	Switch position
External audio source (e.g. mixer)	LINE
Dynamic microphone, battery-operated microphone	MIC
+48 V phantom power microphone	MIC+48V

- Selecting MIC+48V and connecting a microphone that is not compatible with a +48V source may damage the connected device. Check the setting before connecting the device.
- If noise is a concern on connectors with no device connected, set the corresponding INPUT1/INPUT2 (LINE/MIC/MIC+48V) switches to LINE.

Adjusting the Audio Recording Level Automatically

Set the CH1/CH2 (AUTO/MAN) switches for the channels to adjust automatically to AUTO.
For CH3/CH4, set the audio level control on the Audio Status screen (page 14) or Audio Input >CH3 Level Control and CH4 Level Control in the Audio menu of the full menu to Auto (page 94).

Adjusting the Audio Recording Level Manually

Use the following procedure to adjust the audio recording level for CH1/CH2.

1 Set the CH1/CH2 (AUTO/MAN) switches for the channels to adjust manually to MAN.

2 During shooting or standby, turn the AUDIO LEVEL (CH1)/(CH2) dials of the corresponding channels to adjust the audio level.

- For CH3/CH4, set the audio level control using CH3/CH4 (page 14) on the Audio Status screen or Audio Input >CH3 Level Control or CH4 Level Control in the Audio menu of the full menu to Manual, and then adjust the audio recording level using CH3 Input Level or CH4 Input Level.
- You can adjust the levels for CH1 to CH4 as a group. You can adjust the recording level using an assignable dial (page 49) assigned with the Audio Input Level function, the Audio Status screen, or Audio Input >Audio Input Level in the Audio menu of the full menu.

[Tip]
The Audio Status screen is convenient for checking the audio input level (page 14).

[Notes]

- The Audio Input Level settings may be disabled, depending on the combination of settings in the Audio menu. For details, see the diagram on page 129.
- The camcorder supports combinations of various settings. For details, see the diagram on page 129.

Adding Audio Input Connectors

You can connect up to four channels of XLR audio devices to the camcorder at the same time by using an XLR-K2M XLR adaptor (not supplied) or XLR-K3M XLR adaptor (not supplied).
Attach the XLR adaptor to the multi-interface shoe, and set CH3 >Source to Shoe CH1 and CH4 >Source to Shoe CH2 on the Audio Status screen (page 14). Or, set Audio Input >CH3 Input Select to Shoe CH1 and CH4 Input Select to Shoe CH2 in the Audio menu of the full menu.
Camcorder functions that overlap will be disabled for channels on which the XLR adaptor is selected as the input. Use the switches and dials on the XLR adaptor to perform adjustments.

[Notes]

- The camcorder supports 2ch digital audio interface of the XLR-K3M.
- If Audio Input >CH3 Level and CH4 Level in the Audio menu are set to Audio Input Level, then Audio Input Level on the camcorder is multiplied by the level adjusted on the XLR adaptor.
  Audio Input Level is also enabled when the XLR adaptor switch is set to AUTO.
  When “Through” is specified, audio will be recorded at the level adjusted with the XLR adaptor (page 130).

Useful Functions

Direct Menu Operation

You can check the status and settings of the camcorder displayed on the viewfinder screen, and directly select and change the settings.
The following items can be configured.

- Face/Eye Detection AF
- SteadyShot
- White Mode
- Color Temp
- Scene File
- ND Filter Position / Auto ND Filter
- ND Filter Value
- Auto Iris
- Iris Value
- AGC
- Gain Value
- ISO Value
- Exposure Index Value
- Auto Shutter / ECS
- Shutter Value
- Auto Exposure Mode
- Auto Exposure Level
- S&Q Motion Frame Rate

1 Press the multi-function dial, or an assignable button assigned with the Direct Menu function.
Only the items on the screen that can be configured using the direct menu are selectable using the orange cursor.

2 Turn the multi-function dial to move the cursor to the menu item to operate, then press the multi-function dial.
A menu is displayed or the item is displayed on a white background.

3 Turn the multi-function dial to select a setting, then press the multi-function dial.
The menu or white background disappears and the new setting is displayed with an orange cursor.
Press the assignable button assigned with Direct Menu again or wait 3 seconds without performing any action to exit the direct menu.

[Tips]

- Direct settings can also be configured by pressing and holding each of the function buttons (page 5).
- When items are displayed on a white background, the multi-function dial can be used like an assignable dial.
- The multi selector (page 9) can also be used for selection operations.

Assignable Buttons/Dials

There are nine assignable buttons (page 6, 7, 9) on the camcorder to which you can assign functions.
You can also assign functions to the multi-function dial on the camcorder (page 5), the assignable dial on the handle (page 7), and the assignable dial on the grip remote control (page 9).

Changing the button function

Use Assignable Button (page 83) in the Project menu of the full menu.
You can view the assigned functions on the Assignable Button Status screen (page 15).

Functions assigned to each assignable button by factory default

Button 1	S&Q Motion
Button 2	AF Speed/Sens.
Button 3	Focus Setting
Button 4	Focus Magnifier x3/x6
Button 5	Direct Menu
Button 6	Off
Button 7	Focus Magnifier x3/x6
Button 8	Direct Menu
Button 9	Video Signal Monitor
Focus Hold button	Focus Hold

Assignable functions

- Off
- Base ISO/Sensitivity
- AGC
- Push AGC
- ND Filter Position
- Auto ND Filter
- Push Auto ND
- Auto Iris
- Push Auto Iris
- Bokeh Control
- Auto Shutter
- Auto Exposure Level
- Backlight
- Spotlight
- Preset White Select
- ATW
- ATW Hold
- AF Speed/Sens.
- Focus Setting
- Focus Area
- Focus Area(AF-S)
- Face/Eye Detection AF
- Push AF Mode
- Push AF/Push MF
- Focus Hold
- Focus Magnifier x3/x6
- Focus Magnifier x3
- Focus Magnifier x6
- S&Q Motion
- SteadyShot
- Rec
- Picture Cache Rec
- Rec Review
- Clip Flag OK
- Clip Flag NG
- Clip Flag Keep
- Color Bars
- Tally [Front]
- DURATION/TC/U-BIT
- Display
- Lens Info
- Video Signal Monitor
- Marker
- VF Adjust
- VF Mode
- Gamma Display Assist
- Peaking
- Zebra
- Volume
- Thumbnail
- Touch Operation
- Handle Zoom
- NFC
- Auto Upload (Proxy)
- Direct Menu
- User Menu
- Menu

Changing the dial function

You can change the function of the multi-function dial on the camcorder, the grip assignable dial, and the handle assignable dial.

For the multi-function dial, set using Multi Function Dial (page 86) >Default Function in the Project menu.
Off is assigned by factory default.

Functions assignable to the multi-function dial

- Off
- ISO/Gain/EI
- IRIS
- Auto Exposure Level
- Audio Input Level

[Note]
The setting is disabled while the menu is displayed.

For the assignable dial, set using Assignable Dial (page 85) in the Project menu of the full menu.
IRIS is assigned to all by factory default.

[Tip]
The assignable dial of the RM-30BP (option) follows the Grip/Remote Dial setting.

Functions assignable to the handle/grip assignable dial

- Off
- ISO/Gain/EI
- ND Filter
- IRIS
- Auto Exposure Level
- Audio Input Level
- Multi Function Dial

You can view the assigned functions on the Assignable Button Status screen (page 15).

Slow & Quick Motion

When the recording format (page 80) is set to the following values, you can specify different values for the shooting frame rate and playback frame rate.

Recording format				Frame rate
System frequency	Imager scan mode	Codec	Video format	
59.94/50/29.97/25/23.98	FF	RAW	3840×2160P	1–60, 100, 120
		RAW & XAVC-I	3840×2160P	1–60, 100, 120
		XAVC-I	4096×2160P	1–60
			3840×2160P	1–60, 100, 120
			1920×1080P	1–60, 100, 120, 150, 180, 200, 240
		XAVC-L	3840×2160P	1–60, 100, 120
			1920×1080P	1–60, 100, 120, 150, 180, 200, 240
	S35	XAVC-I	1920×1080P	1–60, 100, 120
		XAVC-L	1920×1080P	1–60, 100, 120
24	FF	XAVC-I	4096×2160P	1–60

You can turn Slow & Quick Motion mode on/off by pressing an assignable button (page 49) assigned with the S&Q Motion function.
You can set the frame rate for shooting by pressing and holding the button.

[Tip]
You can also set the mode using S&Q Frame Rate on the Main Status screen, Rec Function on the Project status screen, and S&Q Motion in the Shooting menu of the full menu.

[Notes]
- Slow & Quick Motion cannot be set during recording, playback, or while the thumbnail screen is displayed.
- Audio recording is not supported in Slow & Quick Motion mode.
- The auto focus function, auto iris function, and auto shutter function are disabled in Slow & Quick Motion mode. However, the auto focus function can be used when the frame rate is set to the following.

System frequency	Frame rate
59.94/29.97/23.98	30, 60, 120, 240
50/25	25, 50, 100, 200

- For details about using RAW output, see page 58.

Recording Video Intermittently (Interval Rec)

The camcorder's Interval Rec function allows you to capture time-lapse video to the camcorder's internal memory. This function is an effective way to shoot slow-moving subjects.
When you start recording, the camcorder automatically records a specified number of frames at a specified interval time.

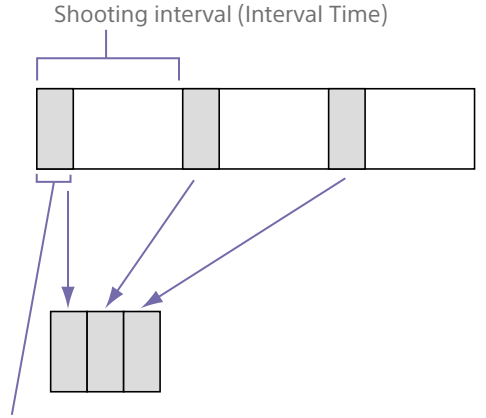

When Interval Rec is enabled, the HVL-LBPC (option) video light automatically turns on before recording starts, which allows you to record pictures under stable light and color temperature conditions (pre-lighting function).

[Notes]
- Only one special recording function, such as Interval Rec recording, can be used at any one time.
- If another special recording mode is enabled while Interval Rec is in use, Interval Rec is automatically released.
- Interval Rec mode is automatically released after changing system settings, such as the video format.
- Interval Rec settings cannot be changed during recording or playback, or when the thumbnail screen is displayed.

To set Interval Rec

Select Rec Function >Interval Rec on the Project status screen, and configure the Number of Frames and Interval Time settings.
If using the HVL-LBPC video light (option), set the time interval for turning on the video light before recording starts using Interval Rec >Pre-Lighting in the Project menu, as required.

[Tip]
You can also set the mode using Interval Rec (page 82) in the Project menu of the full menu.

[Notes]
- If you want to turn the video light on before the start of recording, set the video light switch to AUTO. The video light turns on and off automatically according to the setting of Video Light Set (page 99) in the Technical menu.
- If you turn the video light switch on, the video light is always lit (video light does not turn on/off automatically).
- If the video light is configured so that it will turn off for a duration of 5 seconds or less, the video light does not turn off.

The camcorder exits Interval Rec mode when it is powered off, but the Number of Frames, Interval Time, and Pre-lighting settings are maintained. You do not need to set them again the next time you shoot in Interval Rec mode.

To shoot using Interval Rec

Press the record START/STOP button to start recording. “Int ●Rec” and “Int ●Stby” appear alternately in the viewfinder.
If you are using the pre-lighting function, the video light turns on before recording starts.

To stop shooting

Stop the recording.
When shooting ends, the video data stored in memory up to that point is written to the media.

To exit Interval Rec mode

Do one of the following.
- Set the POWER switch to Off.
- In recording standby mode, set Rec Function to a setting other than Interval Rec on the Project status screen.

Also, Interval Rec mode is automatically released when the camcorder is restarted.

Limitations during recording

- Audio is not recorded.
- Reviewing the recording (Rec Review) is not possible.

If the camcorder is turned off during recording

- If the POWER switch on the camcorder is set to the Off position, the media is accessed for several seconds to record the images stored in memory up till that moment, and then the power turns off automatically.
- If power is lost because the battery was removed, the DC power cord was disconnected, or the power was turned off from the AC adaptor, then the video and audio data shot up to that point may be lost (maximum 10 seconds). Care should be exercised when exchanging the battery.

Recording Cached Pictures (Picture Cache Rec)

The Picture Cache Rec function allows you to capture video retroactively when you start recording by maintaining an internal cache memory of a specified duration when shooting.
Set Picture Cache Rec to On on the Project status screen and then set the cache size.

Cache Size setting	Cache time (approximate)
Short	5 seconds
Medium	10 seconds
Long	20 seconds
Max	Maximum value or each recording format

[Tips]
- The cache time may be shorter, depending on the shooting frame rate and recording format. Check the display at the bottom right of the cache size setup screen.
- You can also set the mode using Picture Cache Rec (page 82) in the Project menu of the full menu.
- You can also switch Picture Cache Rec between On and Off using an assignable button (page 49).

[Notes]
- Picture Cache Rec cannot be used in combination with Interval Rec, 2-slot simultaneous recording, or proxy recording. When Picture Cache Rec is set to On, these other recording functions are forcibly set to Off.
- Picture Cache Rec mode cannot be selected while recording or Rec Review is in progress.
- When both Slow & Quick Motion and Picture Cache Rec are set to On, the timecode is recorded in Free Run mode regardless of the setting in the TC/Media menu (page 89).
- The Output Format setting may not be configurable in Picture Cache Rec mode. If this occurs, temporarily set Picture Cache Rec to Off, and then change the setting.

Starting Picture Cache Rec

When Picture Cache Rec is set to On, “●Cache” (● is green) appears in the viewfinder .
When you press the record START/STOP button, recording starts and video is written to memory cards starting from the video stored in the cache memory.

To cancel Picture Cache Rec

Set Picture Cache Rec Off on the Project status screen, or press an assignable button assigned with the Picture Cache Rec function.

[Notes]
- Changing the recording format or basic look clears the video in cache memory stored up to that point, and starts caching new video. Consequently, picture cache recording of pictures before changing format is not possible, even if you start recording immediately after changing format.
- If Picture Cache Rec is set to On or Off immediately after inserting a memory card, cache data may not be recorded on the card.
- Video is stored in cache memory when the Picture Cache Rec function is set to On. Video prior to the function being set to On is not cached.
- Video is not stored in cache memory while a memory card is being accessed, such as during playback, Rec Review, or thumbnail screen display. Picture cache recording of video during that interval is not possible.

Recording to Memory Cards A and B Simultaneously (2-slot Simul Rec)

You can record to both memory card A and memory card B simultaneously by setting Simul Rec (page 14) on the Project status screen or Simul Rec >Setting (page 82) in the Project menu of the full menu to On.

Recording separately to memory card A and memory card B

You can start/stop recording to each memory card independently using the record START/STOP buttons on the camcorder and the handle.
By factory default, both buttons are set to start/stop simultaneous recording to both memory cards A and B.

- "Rec Button:[SlotA SlotB] Handle Rec Button:[SlotA SlotB]"

When the buttons are set to control recording for different memory cards, SDI/HDMI Rec Control (page 83) follows the recording state of slot A.

To change the setting

Select Simul Rec >Rec Button Set (page 82) in the Project menu.

Rec Button Set	Buttons and memory cards
"Rec Button:[SlotA SlotB] Handle Rec Button:[SlotA SlotB]"	Starts/stops simultaneously recording to memory cards A and B using either button.
"Rec Button:[SlotA] Handle Rec Button:[SlotB]"	The record START/STOP button starts/stops recording to memory card A, and the record START/STOP button on the handle starts/stops recording to memory card B.
"Rec Button:[SlotB] Handle Rec Button:[SlotA]"	The record START/STOP button starts/stops recording to memory card B, and the record START/STOP button on the handle starts/stops recording to memory card A.

[Tip]
The record button on the grip remote control or LANC remote control operate the same as the record START/STOP button of the unit.

To prevent accidental operation of the handle record START/STOP button

Set the handle HOLD switch to the HOLD position.

[Note]
The handle HOLD switch does not function when HOLD Switch Setting (page 97) >with Rec Button is set to Off in the Technical menu of the full menu. When set to On, set Handle HOLD Switch to Rec Button Only.

To enable the zoom lever and buttons other than the handle record START/STOP button, set HOLD Switch Setting >Handle HOLD Switch to Rec Button Only.

Video Signal Monitor

You can set the type of video signal to display on the viewfinder screen to waveform, vectorscope, or histogram using Display On/Off >Video Signal Monitor (page 92) in the Monitoring menu.
The orange line indicates the set value of the zebra level.
You can also assign the Video Signal Monitor function to an assignable button (page 49).

Monitoring target display

In Cine EI mode, the color space setting (page 24) or monitor LUT setting (page 79) information is displayed at the top right of the video signal monitor to indicate the target of monitoring.

Gamma Display Assist Function

When Target Display is set to HDR(HLG) in Custom mode (page 24), set Gamma Display Assist* on the Monitoring Status screen to On to view an assisted display in the viewfinder that makes shooting in HDR easier.

* You can also set the function using Gamma Display Assist >Setting (page 93) in the Monitoring menu of the full menu.

Selecting the viewfinder display when the gamma display assist function is enabled

There are two display methods supported for displaying HDR images in the viewfinder when the gamma display assist function is enabled.

Displaying HDR with maintained contrast between low luminance areas and high luminance areas

This method takes advantage of the expressive power of HDR to display the image in the viewfinder without causing crushed blacks or blown out highlights, even when shooting with bright or dark exposure. However, the contrast is slightly reduced.
To use this display method, set HDR Setting >VF SDR Preview (page 82) to Off in the Project menu of the full menu.

Displaying SDR by simple conversion from HDR to SDR

This method allows you to operate the camera with the same feeling as conventional SDR. You can adjust the brightness of the HDR image by setting the difference in gain between HDR and SDR using SDR Gain.
To use this display method, configure using the following procedure.

1 Set HDR Setting >VF SDR Preview (page 82) to On in the Project menu of the full menu.

2 Adjust the SDR gain value in HDR mode using HDR Setting >SDR Gain (page 82) in the Project menu of the full menu.

[Tip]
When converting from an HDR image to SDR using SR Live Metadata after shooting, SDR Gain is applied to the conversion so that the SDR image display has the same exposure that was viewed in the viewfinder at the time of shooting.

Clip Flags

You can add an OK clip flag to a clip by pressing the Clip Flag button (page 5) and selecting Add OK.
You can delete an OK clip flag by pressing the button twice and selecting Delete Clip Flag.

[Tips]
- You can also use an assignable button assigned with the clip flag function to add clip flags (page 49).
- You can also add a clip flag using Set Clip Flag (page 96) in the Thumbnail menu of the full menu (page 68).

Breathing Compensation

You can set whether to perform breathing compensation for the lens using Lens >Breathing Compensation (page 98) in the Technical menu of the full menu.
This function corrects for the phenomenon in which changes in the angle of view occur as the focus position varies.
When breathing compensation is executed, a portion of the image is electronically cropped to maintain a constant angle of view so the breathing phenomenon does not appear.

[Notes]
- When breathing compensation is enabled, the angle of view and image quality may change slightly.
- Depending on the lens, it may not be possible to correct the change in the angle of view when breathing compensation is enabled.
- Compensation is not possible when a lens that does not support breathing compensation is attached.
- This function is set to Off (fixed) in the following cases.
  - When Lens >Distortion Comp. in the Technical menu is set to Off
  - When S&Q Motion >Setting in the Shooting menu is set to On
  - When Rec Format >Codec in the Project menu is set to RAW or an option that includes RAW

Adjusting the Bokeh (Bokeh Control Function)

You can easily adjust the degree of bokeh by linking the ND filter and gain to the iris operation.

Switching the bokeh control function on/off

This function can be enabled only when adjusting the exposure manually. Set the iris, gain, shutter, and ND filter to manual adjustment, then set the ND filter to variable mode.
You can switch the bokeh control function on/off using Iris >Bokeh Control (page 76) in the Shooting menu of the full menu.
When the bokeh control function is set to On, a Ⓑ icon is displayed on the ND filter and gain indicators.

[Tip]
You can also assign the Bokeh Control function to an assignable button (page 49) and switch the bokeh control function between On and Off using the button.

Adjusting the degree of bokeh

1 Set the bokeh control function to On.

2 Adjust the ND filter and gain to determine the exposure.

3 Adjust the iris.
The degree of bokeh changes.

[Tips]
- When the bokeh control function is set to On, the ND filter and gain operate together to offset changes in exposure due to iris adjustment, allowing you to change the degree of bokeh.
- The bokeh control is first linked to the ND filter in response to the iris operation. When the ND filter can no longer be changed, the gain is linked.
- In MF mode, it is recommended that you first open the iris and then adjust the focus.
- If you use the auto ND filter instead of the bokeh control function, the ND filter follows the change in the brightness of the subject.

Display during gain link operation

When the bokeh control function is set to On, the gain may change as the iris is adjusted. When the gain link is active and the gain changes, a message appears at the top of the screen and a Ⓑ icon on the gain indicator flashes.

[Notes]
- This function is enabled only on E-mount lenses that can communicate with the unit.
- The maximum effect of this function can be obtained using the iris ring on a Sony E-mount lens.
- The appearance may vary depending on the operation speed, lens, shooting settings, and subject, and also the brightness may change. Performing a camera test before shooting is strongly recommended.
- The brightness may change when the iris operation direction changes, such as when opening the iris after closing it or when closing the iris after opening it. In this case, adjust slightly more than required beforehand and then back up a little, check the brightness, and then start shooting.
  For example, if you want to open the iris to F8 aperture and blur the background, first close the aperture past F8 and then return to F8, check the brightness, and start shooting.
- Perform bokeh control operations slowly. If you need to speed up the operation, try adjusting gradually while checking the changes to the image.
- The quality of the image with bokeh control is not guaranteed under all shooting conditions.
- The bokeh control function is set to Off when any of the following operations occurs.
  - When the camcorder is turned off
  - When any of the iris, gain, shutter, or ND filter is set to Auto
  - When the shooting mode is switched
  - When the ND filter is set to clear or preset mode
  - When the lens is removed
  - When the unit restarts, for example, after switching the frequency

Proxy Recording

This function allows you to simultaneously record low-resolution proxy data at the same time as recording high-resolution original data video.

For details about supported memory cards, formatting memory cards, and checking the remaining capacity, see "Using Memory Cards" (page 26).

Configuring Before Shooting

1 Set Proxy Rec (page 14) on the Project status screen or Proxy Rec >Setting (page 82) in the Project menu of the full menu to On.

2 Insert a memory card into a CFexpress Type A/SD card slot (page 6).
- For CFexpress cards, the label faces to the left.
- For SD cards, the label faces to the right with the beveled corner at the bottom.

[Note]
Proxy Rec cannot be set to On at the same time as S&Q Motion or Interval Rec. When Proxy Rec is set to On, these other recording modes are forcibly set to Off.

Recording a Proxy

Press the record START/STOP button to start the recording after completing the required setting for shooting.

[Notes]
- If the camcorder is turned off or the memory card is removed while the memory card is being accessed, the integrity of data on the card cannot be guaranteed. All data recorded on the memory card may be discarded. Always make sure the memory card access indicator is off before turning off the camcorder or removing the memory card.
- Make sure that the memory card does not pop out when inserting or removing it.

To exit, stop the recording.

Setting the Audio Channel for Proxy Recording

Select Proxy Rec >Audio Channel (page 82) in the Project menu of the full menu, and set the audio channel for proxy data recording.

About the Recorded File

The file name extension is ".mp4".
The timecode is also recorded simultaneously.

Storage Destination of the Recorded File

The recorded file is stored in the following directory.

Recording media	Folder path
SDXC	/PRIVATE/XDROOT/Sub
CFexpress Type A	/XDROOT/Sub

About the File Name

The file name consists of the clip name recorded on the memory card and an "S03" suffix.
For details about clip names, see Clip Name Format (page 89) in the TC/Media menu of the full menu.

Shooting with the Desired Look

When the camcorder is in Custom mode, you can add adjustments to the black, matrix, and other parameters to create a “look” based on the base look.

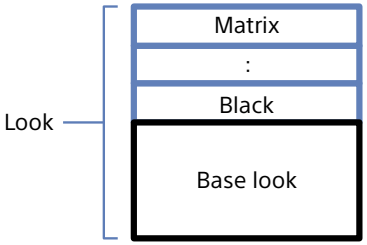

You can also quickly select a different look by saving different combinations of settings in scene files.
The camcorder is provided with a total of six preset looks.

Selecting a Look

1 With the shooting screen displayed, press the multi-function dial.

2 Select the SCN (scene file) icon.

3 Press the multi-function dial.

4 Select the desired look from the menu, and press the multi-function dial.

[Tips]

- The following presets are configured by factory default.

Shooting Mode	Custom	
Target Display	SDR(BT.709)	HDR(HLG)
Scene file 1	S-Cinetone	HLG Live
Scene file 2	Standard	HLG Natural
Scene file 3	Still	(Not registered)
Scene file 4	ITU709	(Not registered)
Scene files 5 to 16	(Not registered)	(Not registered)

- You can also select a look using Scene File (page 13) on the Main Status screen or Scene File >Recall (page 87) in the Paint/Look menu of the full menu. You can also recall a preset look using Scene File >Preset Recall.

Importing a Desired Base Look

You can import a 3D LUT file, created on a computer or other device, as a base look. Up to 16 files can be imported.

- File format: CUBE file (*.cube) for a 17-point or 33-point 3D LUT created using Catalyst Browse, RAW Viewer, or DaVinci Resolve* (by Blackmagic Design Pty. Ltd.).
  * Verified with Resolve V9.0, V10.0, and V11.0.
- Input color space/Gamma: S-Gamut3.Cine/S-Log3 or S-Gamut3/S-Log3

1 On the computer or other device, save the 3D LUT file in the specified folder or the recording media.

Recording media	Folder path
SDXC	/PRIVATE/SONY/PRO/LUT/
CFexpress Type A	/SONY/PRO/LUT/

2 Insert the recording media on which 3D LUT files are saved into CFexpress Type A/SD card slot (B).

3 Select Base Look >Import (page 87) in the Paint/Look menu of the full menu.

4 Select an import destination.

5 Select a 3D LUT file to import.
Follow the on-screen instructions. The camcorder handles a 3D LUT file as a base look.

6 Select the imported 3D LUT file using Base Look >Select (page 87) in the Paint/Look menu of the full menu.

7 Configure Base Look >Input and Output (page 87) in the Paint/Look menu of the full menu to match the attributes of the imported 3D LUT file.

Adjusting for underexposure

If there is a tendency for underexposure when auto exposure is selected when using the imported base look, adjust Base Look >AE Level Offset (page 87) in the Paint/Look menu.

[Notes]

- Just importing a 3D LUT file does not affect the image. Load the imported 3D LUT file using Base Look >Select (page 87) in the Paint/Look menu of the full menu.
- If Input is not set correctly, the proper look will not be obtained.
- The Input, Output, and AE Level Offset menu item settings are applied to the base look selected using Select. If multiple 3D LUT files are imported, select Select for each 3D LUT file, and configure Input, Output, and AE Level Offset individually for each file.
- The configured Input, Output, and AE Level Offset settings are saved for each 3D LUT file.
- The base look/LUT selection options for imported 3D LUT files are common to SDR(BT.709)/HDR(HLG)/Cine EI modes, but color space and gamma conversion is not performed according to these modes.
- 3D LUT files are not deleted when All Reset >Reset is executed in the Maintenance menu of the full menu.

Customizing a Look

You can customize the look based on the base look using the Matrix and other setup items in the Paint/Look menu of the full menu. For details about each setup item, see page 87.
Connect your camcorder to a TV or monitor, and adjust the picture quality while observing the picture on the TV or monitor screen.

[Note]
When you import a 3D LUT file and apply it to the image, the desired look defined in the 3D LUT file will not be obtained if Matrix and settings other than base look settings in the Paint/Look menu are changed. You can reset all customized settings using Reset Paint Settings >Reset without Base Look (page 87) in the Paint/Look menu of the full menu.

Saving a Look

You can save the current look as a scene file in internal memory using Scene File >Store (page 87) in the Paint/Look menu of the full menu.
You can quickly save using operations in the direct menu from the shooting screen.

[Notes]
- If you select another look without saving the current look, the current look is discarded.
- Scene files are not deleted when All Reset >Reset (page 104) is executed in the Maintenance menu of the full menu.

[Tip]
You can overwrite the preset scene files.
To restore a preset scene file, load the look to be restored using Scene File >Preset Recall (page 87) in the Paint/Look menu of the full menu, and then save the scene file using Scene File >Store.

Deleting a saved look

You can delete a scene file saved in internal memory using Scene File >Delete (page 87) in the Paint/Look menu of the full menu.

[Tip]
When deleted, it is no longer displayed in the direct menu.

Deleting a base look

You can delete an imported 3D LUT file using Base Look >Delete (page 87) in the Paint/Look menu of the full menu.
You can delete all imported 3D LUT files using Base Look >Delete All (page 87) in the Paint/Look menu of the full menu.

[Notes]
- Before deleting, check that the base look is not being used in any scene files. If a base look that is being used is deleted, the look of the corresponding scene files will be incorrect.
- Imported 3D LUT files are not deleted when All Reset >Reset (page 104) is selected in the Maintenance menu of the full menu.
- A deleted base look can no longer be used as a LUT in Cine EI mode (page 57).

Shooting with Look Adjustment in Post-Production

By using the camcorder in Cine EI mode and recording gradations evenly from dark areas to bright areas, you can make fine adjustments, such as locally restoring the gradations of dark areas and bright areas, in post production. However, when viewing the recorded images on a conventional monitor, the overall contrast will appear low, making focus and exposure adjustments difficult.
You can apply a LUT to the monitor target on the camcorder to assist various adjustments during shooting. You can also apply a LUT to the playback video to check the finished result.
LUTs are applied by the following systems. However, only one LUT can be applied.

- SDI output and HDMI output
- Viewfinder and proxy images, streaming
- Video recorded on recording media

Applying a LUT to the Viewfinder Image

1 Press the MENU button to display the Monitoring Status screen.

2 Select the Gamut/Gamma column in the VF row.

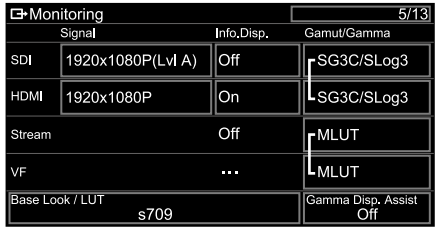

3 Select On or Off.

[Notes]

- The LUT On/Off setting of VF is also applied to proxy file and streaming video.
- Gamma display assist is available during focus magnifier operation.

[Tips]

- You can also set using LUT On/Off >VF/Proxy/Stream (page 79) in the Shooting menu of the full menu.
- SDI/HDMI can be set similarly to VF.
- For video on recording media, you can set using LUT On/Off >Internal Rec (page 79) in the Shooting menu of the full menu.

Changing a LUT

1 Press the MENU button to display the Monitoring Status screen.

2 Select the Base Look/LUT field.

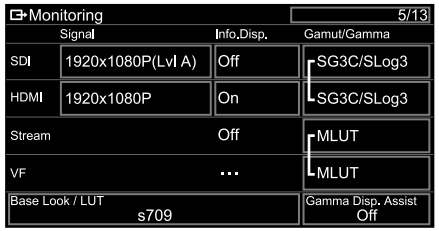

3 Select the LUT to apply from the base look list.

[Tips]

- You can also import and apply a 3D LUT file. s709, 709(800%), or S-Log3 can be selected for the base look. For details, see “Importing a Desired Base Look” (page 55) and “Deleting a base look” (page 56).
- The base look can also be set using Base Look >Select (page 87) in the Paint/Look menu of the full menu.

Changing the Distribution of Dark and Bright Areas in Recorded Video

You can change the distribution of dark areas and bright areas, for example, if you want to prioritize the tone of dark areas over bright areas, by changing the Exposure Index from the base sensitivity.

1 Apply a LUT to the viewfinder image (page 57).

2 Press the MENU button to display the Camera Status screen.

3 Set the L/M/H fields of Exposure Index. The individual settings are assigned to the L/M/H positions of the ISO/GAIN switch (page 5).

4 Select the Exposure Index value to apply using the ISO/GAIN switch.

5 Adjust the exposure of the viewfinder image as appropriate.

[Note]
Gamma display assist is available during focus magnifier operation. The Exposure Index setting is not applied to gamma display assist.

[Tips]

- The exposure can also be adjusted using ISO/Gain/EI >Exposure Index (page 75) in the Shooting menu of the full menu.
- The second numerical value of the setting indicates how many steps of brightness information are assigned for bright areas (brightness higher than 18% gray). Areas brighter than these are overexposed. Example: In “400EI/5.0E,” 5.0 steps are assigned on the bright side.
- You can also use this as a guide to check the tone of dark and bright areas during shooting. For example, if the M position is the base sensitivity, L position is minus 2 steps, and H position is plus 2 steps, you can check by switching the ISO/GAIN switch. Remember to return to the M position after checking the exposure.

Recording RAW Video

You can record the RAW video signal output from the SDI OUT connector or HDMI OUT connector of the camcorder to a supported external recorder.

Recording from the SDI OUT Connector

1 Connect an external RAW recorder to the SDI OUT connector of the camcorder.

2 Set the shooting mode using the Project status screen (page 14) or Base Setting >Shooting Mode (page 80) in the Project menu of the full menu to Cine EI.

3 Set the scan mode (FF only) using Imager Scan on the Project status screen or Rec Format >Imager Scan Mode (page 80) in the Project menu of the full menu.

4 Set the codec using the Project status screen or Rec Format >Codec (page 80) in the Project menu of the full menu to a codec that includes RAW.
Selecting RAW & XAVC-I will simultaneously record video to the external RAW recorder and video to the memory cards in the camcorder.

5 Set the resolution using the Project status screen or Rec Format >RAW Output Format (page 80) in the Project menu of the full menu.

6 Check that the external recorder is turned on, then press the record START/STOP button on the camcorder.

[Note]
When recording is started on an external recorder, without using the record START/STOP button on the camcorder, clips may not be recorded properly.

The supported RAW output formats are shown below.

System frequency	Codec	RAW Output Format
59.94/ 50/ 29.97/ 25/ 23.98	RAW	4096×2160
		3840×2160
	RAW & XAVC-I	4096×2160
		3840×2160
24	RAW	4096×2160
	RAW & XAVC-I	4096×2160

Recording from the HDMI OUT Connector

1 Connect an external RAW recorder to the HDMI OUT connector of the camcorder.

2 Set the shooting mode using the Project status screen (page 14) or Base Setting >Shooting Mode (page 80) in the Project menu of the full menu to Cine EI.

3 Set the scan mode (FF only) using Imager Scan on the Project status screen or Rec Format >Imager Scan Mode (page 80) in the Project menu of the full menu.

4 Set the codec using the Project status screen or Rec Format >Codec (page 80) in the Project menu of the full menu to RAW(HDMI).
Selecting RAW(HDMI) & XAVC-I will simultaneously record video to the external RAW recorder and video to the memory cards in the camcorder.

5 Check that the external recorder is turned on, then press the record START/STOP button on the camcorder.

[Note]
When recording is started on an external recorder, without using the record START/STOP button on the camcorder, clips may not be recorded properly.

The supported RAW output formats are shown below.

System frequency	Codec	RAW Output Format
59.94/ 50/ 29.97/ 25/ 23.98	RAW(HDMI)	4240×2392
	RAW(HDMI) & XAVC-I	4240×2392

Recording Status Indicator

When Display On/Off (page 91) >RAW Output Control Status in the Monitoring menu of the full menu is set to On, the RAW recording status is indicated by an icon displayed on the viewfinder screen.

[Note]
The recording control signal is output from the SDI OUT connector of the camcorder, but it is not possible to get the status of the external recorder. Accordingly, the camcorder may indicate RAW video recording is in progress when the external recorder is not actually recording. Check the indicator on the external recorder to obtain the correct operating status.

[Tip]
The RAW Output Format setting value is also displayed.

Slow & Quick Motion Recording

If S&Q Motion >Setting in the Shooting menu is set to On, RAW video is recorded in Slow & Quick Motion mode.
For details about the supported frame rates for shooting, see page 50.

[Note]
Slow & Quick Motion recording from the HDMI OUT connector is not supported.

Connecting to Other Devices via LAN

The camcorder can connect to smartphones, tablets, and other devices via LAN connection. Making a LAN connection between a device and the camcorder enables the following using the “Content Browser Mobile” application.

- Remote control
  You can control the camcorder from a smartphone or tablet that is connected to the camcorder via a LAN.
- File transfer
  You can transfer a proxy file (low resolution) or original file (high resolution) that is recorded on a memory card in the camcorder to the server via a LAN.
- Video monitoring
  You can monitor the camera image or playback video of the camcorder using the “Content Browser Mobile” application on a device.

[Note]
Monitoring of the video is not supported with the following settings.
– Slow & Quick Motion mode
– System frequency of 24
– Interval Rec mode

“Content Browser Mobile” application

You can operate the camcorder remotely on the device screen while monitoring the video from the camcorder, and configure settings of the camcorder, using the “Content Browser Mobile” application.

For details about the “Content Browser Mobile” application, contact your Sony sales or service representative.

Setting the User Name and Password

Set the user name and password of the camcorder in order to use the network function.

1 Set Access Authentication >User Name (page 100) in the Network menu of the full menu.

2 Set Access Authentication >Input Password (page 100) in the Network menu of the full menu.

[Tips]
- You can also generate a password automatically. Execute Generate Password instead of Input Password.
- The user name, password, text, and QR code can be made visible using Show Settings.

[Note]
Take care that the QR code and password cannot be viewed by other people.

Connecting using Wireless LAN Access Point Mode

The camcorder works as an access point, and connects to a device via a wireless LAN.

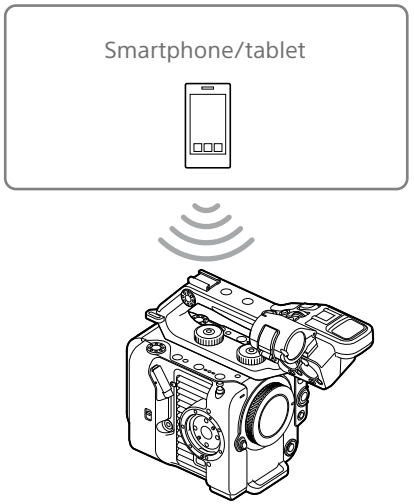

Connecting to an NFC-compatible device with one-touch operation

Devices that support NFC can be connected (one-touch connection) using NFC.

1 Open [Settings] on the device, select [More], and place a check mark in the NFC checkbox.

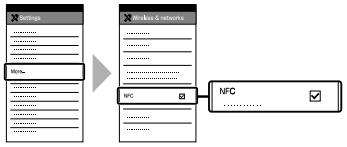

2 Turn the camcorder on.

3 Activate the NFC function.
Press and hold (for 3 seconds) an assignable button assigned with NFC or select Wireless LAN >NFC in the Network menu to activate NFC connection mode.
The NFC function is available only while N appears on the screen.

4 Touch the camcorder using the device.
The device connects to the camcorder and “Content Browser Mobile” starts.

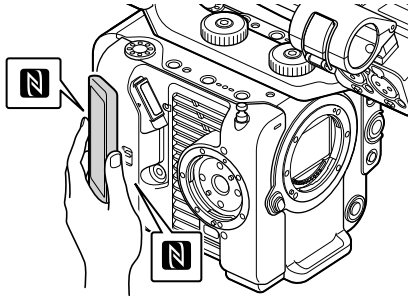

[Notes]
- Disable sleep mode and screen lock beforehand.
- Touch and hold the device still until the “Content Browser Mobile” application launches (1 to 2 seconds).

Connecting to a WPS-compatible device

Devices that support WPS can be connected using WPS.

1 Select Wireless LAN >Setting >Access Point Mode in the Network menu of the full menu.

2 Select Wireless LAN >WPS >Execute in the Network menu of the full menu.

3 Open the device Network settings or Wi-Fi settings on the device, and turn Wi-Fi on.

4 Select the camcorder SSID from the SSID list in Wi-Fi Network on the device, then select WPS Push Button in Option on the device to connect.

[Notes]
- The operation method differs depending on the device.
- For the SSID and password of the camcorder, check AP Mode Settings >Camera SSID & Password (page 100) in the Network menu of the full menu.

5 Connect using the Content Browser Mobile application.

[Tip]
You can check the information required for connecting to the unit using Access Authentication >Show Settings (page 100) in the Network menu of the full menu.

Connecting by inputting an SSID and password on a device

You can connect the camcorder to a device by entering the SSID and password of the unit on a device.

1 Select Wireless LAN >Setting >Access Point Mode in the Network menu of the full menu.

2 Open the device Network settings or Wi-Fi settings on the device, and turn Wi-Fi on.

3 Connect the device to the camcorder by selecting the camcorder SSID from the SSID list in Wi-Fi Network and entering the password.
For the SSID and password of the camcorder, check AP Mode Settings >Camera SSID & Password (page 100) in the Network menu.

[Note]
The operation method differs depending on the device.

4 Connect using the Content Browser Mobile application.

[Tip]
You can check the information required for connecting to the unit using Access Authentication >Show Settings (page 100) in the Network menu of the full menu.

Connecting using Wireless LAN Station Mode

The camcorder connects to an existing access point of the wireless LAN as a client. The camcorder and device connect via the access point.
The 10 most recently connected access points are displayed in the history.
The connection history is saved in an ALL file, but the access passwords are not saved. Password entry is required the next time you connect after loading the ALL file.

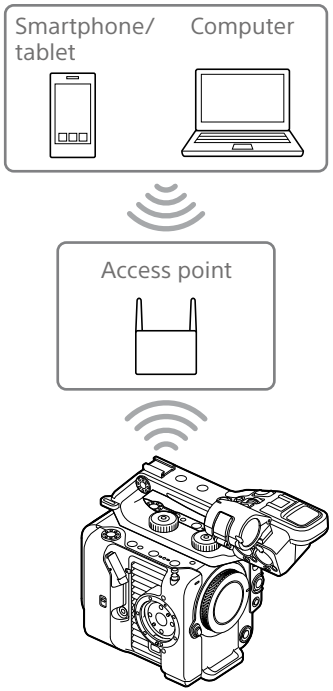

Connecting to an access point using WPS

If the access point is compatible with the WPS function, you can connect to the access point with simple settings.

1 Turn the access point on.

2 Turn the camcorder on.

3 Select Wireless LAN >Setting > Station Mode in the Network menu of the full menu.

4 Select ST Mode Settings >Camera Remote Control (page 101) >Enable in the Network menu of the full menu.

5 Select Wireless LAN >WPS >Execute in the Network menu of the full menu.

6 Press the WPS button of the access point.
For details about the operation of the WPS button, refer to the operating instructions of the access point.
When the connection is successful, the network status indicator icon will show a strength of 1 or higher on the viewfinder screen.

[Note]
If the connection fails, perform steps from step 1 again.

7 Connect the device to the access point.
For details about connecting, refer to the operating instructions of the device.

8 Launch the “Content Browser Mobile” application on a device and select the unit.

[Tip]
You can check the information required for connecting to the unit using Access Authentication >Show Settings (page 100) in the Network menu of the full menu.

Connecting using the access point auto detection function

1 Perform steps 1 to 3 in “Connecting to an access point using WPS” (page 60).

2 Select ST Mode Settings >Scan Networks (page 101) >Execute in the Network menu of the full menu.
The camcorder starts detection of connection destinations.
Possible destinations that are found are displayed in a list.

3 Select a destination from the list.
The network (access point) details screen appears. The selected connection is displayed in SSID.

4 Select Password and enter the password for the access point to connect on the password input screen.
Selecting an SSID in the connection history automatically configures settings, including the password.
Set the password to return to the network (access point) details screen.

5 Configure the following connection settings.
- DHCP
  Set the DHCP setting.
  When you set to On, the IP address is assigned to the camcorder automatically.
  To assign the IP address to the camcorder manually, set to Off.
- IP Address
  Enter the IP address of the unit.
  This setting is available only when DHCP is set to Off.
- Subnet Mask
  Enter the subnet mask of the unit.
  This setting is available only when DHCP is set to Off.
- Gateway
  Enter the gateway for the access point.
  This setting is available only when DHCP is set to Off.
- DNS Auto
  Sets whether to acquire DNS automatically.
  When set to On, the DNS server address is automatically acquired. This setting is available only when DHCP is set to On.
- Primary DNS Server
  Enter the primary DNS server for the access point.
  This setting is available only when DNS Auto is set to Off.
- Secondary DNS Server
  Enter the secondary DNS server for the access point.
  This setting is available only when DNS Auto is set to Off.

6 When finished, select Connect to connect to the access point.

7 Connect the device to the access point.
For details about connecting, refer to the operating instructions of the device.

8 Launch the “Content Browser Mobile” application on a device and select the unit.

[Tip]
You can check the information required for connecting to the unit using Access Authentication >Show Settings (page 100) in the Network menu of the full menu.

Connecting manually by entering access point information

1 Perform steps 1 to 3 in “Connecting to an access point using WPS” (page 60).

2 Select ST Mode Settings >Manual Register (page 102) >Execute in the Network menu of the full menu.
Momentarily, the network (access point) details screen appears.

3 Configure the following connection settings.
- SSID
  Enter the SSID for the connection access point.
- Security
  Select the encryption method.
- Password
  Enter the password for the connection access point.
- DHCP
  Set the DHCP setting.
  When you set to On, the IP address is assigned to the camcorder automatically.
  To assign the IP address to the camcorder manually, set to Off.
- IP Address
  Enter the IP address of the unit.
  This setting is available only when DHCP is set to Off.
- Subnet Mask
  Enter the subnet mask of the unit.
  This setting is available only when DHCP is set to Off.
- Gateway
  Enter the address of the gateway.
  This setting is available only when DHCP is set to Off.
- DNS Auto
  Sets whether to acquire DNS automatically.
  When set to On, the DNS server address is automatically acquired. This setting is available only when DHCP is set to On.
- Primary DNS Server
  Enter the address of the primary DNS server.
  This setting is available only when DNS Auto is set to Off.
- Secondary DNS Server
  Enter the address of the secondary DNS server.
  This setting is available only when DNS Auto is set to Off.

4 When finished, select Connect to connect to the access point.

5 Connect the device to the access point.
For details about connecting, refer to the operating instructions of the device.

6 Launch the “Content Browser Mobile” application on a device and select the unit.

[Tip]
You can check the information required for connecting to the unit using Access Authentication >Show Settings (page 100) in the Network menu of the full menu.

Connecting to the Internet

You can connect the camcorder to the Internet using USB tethering, wired LAN, or wireless LAN.
Set the user name and password of the camcorder beforehand (page 59).

Connecting using USB Tethering

You can connect the unit to a smartphone via a USB cable, and then connect to the Internet using the smartphone.

Configuring smartphone communication

Enable tethering communication on the smartphone.
For details, refer to the operation manual for the smartphone.

Attaching a smartphone to the camcorder

Connect a USB cable to the USB-C connector (page 7) of the camcorder, and then connect the smartphone.

[Notes]
- Attach/remove the smartphone while the camcorder is turned off.
- USB tethering cannot be used if the smartphone is connected via a USB hub.
- USB tethering cannot be used if a computer is attached to the USB/multi connector (page 7).

Connecting to a network

1 Turn the camcorder on.

2 Set Modem >Setting (page 102) in the Network menu of the full menu to On.

Enabling operation from a smartphone

You can control the camcorder remotely using the Content Browser Mobile application on a smartphone connected using a USB cable.

1 Set Modem >Camera Remote Control (page 102) to Enable in the Network menu of the full menu.

2 Launch the “Content Browser Mobile” application on a smartphone and select the unit.

[Tip]
You can check the information required for connecting to the unit from the Content Browser Mobile application using Access Authentication >Show Settings (page 100) in the Network menu of the full menu.

Connecting using Wireless LAN Station Mode (Wi-Fi Station Mode)

You can connect the camcorder to the Internet in Wi-Fi station mode using an optional Wi-Fi router or by Wi-Fi tethering on a smartphone. Connect to the Wi-Fi router or device as described in “Connecting using Wireless LAN Station Mode” (page 60).

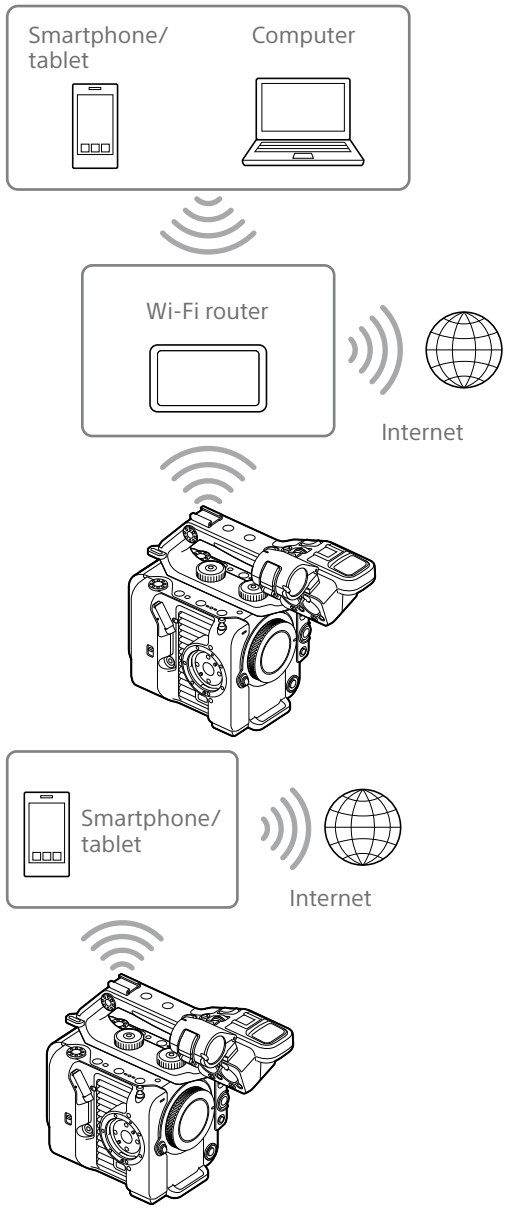

Connecting using a LAN Cable

You can connect to the Internet by connecting the wired LAN connector of a wired LAN adaptor (option) attached to the USB-C connector (page 7) of the camcorder to a Wi-Fi router (option) using a LAN cable.

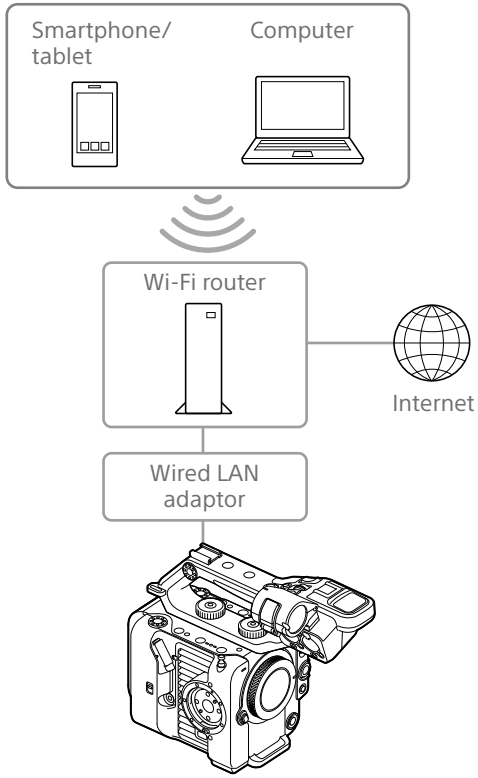

LAN cable connections and wired LAN settings

1 Attach a wired LAN adaptor to the USB-C connector of the camcorder.

2 Connect the wired LAN connector of the wired LAN adaptor to a Wi-Fi router using a LAN cable.

3 Turn the camcorder on.

4 Set Wired LAN >Setting (page 102) in the Network menu of the full menu to On.

5 Configure connection settings using Wired LAN >Detail Settings (page 102) in the Network menu.

- DHCP
  Set the DHCP setting.
  When you set to On, the IP address is assigned to the camcorder automatically.
  To assign the IP address to the camcorder manually, set to Off.
- IP Address
  Enter the IP address of the unit.
  This setting is available only when DHCP is set to Off.
- Subnet Mask
  Enter the subnet mask of the unit.
  This setting is available only when DHCP is set to Off.
- Gateway
  Enter the address of the gateway.
  This setting is available only when DHCP is set to Off.
- DNS Auto
  Sets whether to acquire DNS automatically.
  When set to On, the DNS server address is automatically acquired. This setting is available only when DHCP is set to On.
- Primary DNS Server
  Enter the address of the primary DNS server.
  This setting is available only when DNS Auto is set to Off.
- Secondary DNS Server
  Enter the address of the secondary DNS server.
  This setting is available only when DNS Auto is set to Off.

6 When finished, select Set to apply the settings.

[Notes]

- Always select Set after changing the connection settings. The settings are not applied if Set is not selected.
- Use a USB Type C wired LAN adaptor. Use of a Gigabit Ethernet compatible adaptor is recommended. However, operation is not guaranteed to work with all devices.
- A USB wired LAN adaptor (option) cannot be used if a computer is attached to the USB/multi connector (page 7).
- The built-in Wi-Fi communication function may be affected, depending on the model of the wired LAN adaptor (option).

Enabling operation from a smartphone via wired LAN

To operate the camcorder remotely using the Content Browser Mobile application on a smartphone via Wi-Fi using a Wi-Fi router connected by wired LAN, set Wired LAN >Camera Remote Control (page 102) in the Network menu of the full menu to Enable.

Uploading Files

You can upload a proxy file or original file that is recorded on the camcorder to a server on the Internet or a server on a local network via a smartphone or access point.

Preparations

Connecting to a network

Connect the camcorder to the Internet or local network as described in “Connecting to the Internet” (page 62) or “Connecting to Other Devices via LAN” (page 59).

Registering a file transfer destination

Register the server for uploading in advance.

1 Select File Transfer >Server Settings1 (or Server Settings2, Server Settings3) in the Network menu of the full menu.
The transfer destination setup screen appears.

2 Set each item on the transfer destination setup screen.

Display Name
Enter the name of the server to display in the transfer destination list.
Service
Displays the server type.
“FTP”: FTP server
Host Name
Enter the address of the server.
Port
Enter the port number of the server to connect.
User Name
Enter the user name.
Password
Enter the password.
Passive Mode
Turn passive mode on/off.
Destination Directory
Enter the name of the directory on the destination server.

[Notes]
- When editing, “□” indicates characters that cannot be changed. Correct operation is not guaranteed when editing a directory name that contains these characters.
  If you need to edit, delete all the characters and re-enter a value.
- If characters that are invalid on the destination server are entered in Destination Directory, files will be transferred to the user’s home directory. Invalid characters will vary depending on the server.

Using Secure Protocol
Set whether to perform secure FTP uploading.
Root Certificate
Load/clear a certificate.
- Load
  Select Set in step 3 to import a CA certificate.

* The certificate to be loaded must be in PEM format with “certification.pem” file name, and should be written to the root directory of the memory card inserted in CFexpress Type A/SD card slot (B).

- Clear
  Select Set in step 3 to clear a CA certificate.
- None
  Do not load or clear a certificate.

[Notes]
- Set the clock of the camcorder to the correct time before importing a CA certificate.
- When recording in XAVC-I 4096×2160P/3840×2160P 59.94/50P, Load cannot be selected.
- In low voltage state, Load/Clear cannot be selected for a CA certificate.

Root Certificate Status
Displays the load status of the certificate.
Reset
Reset the settings of Server Settings to the defaults.

3 When finished, select Set to apply the settings.
Always select Set after changing the settings. The settings are not applied if Set is not selected.

Selecting a File and Uploading

You can select proxy files or original files recorded on memory cards for transfer to a server.

Uploading a proxy file on a memory card from the thumbnail screen

1 Connect the camcorder and device using a LAN connection (page 59).

2 Select Transfer Clip (Proxy) >Select Clip in the Thumbnail menu of the full menu.
The display changes from the full menu to the thumbnail screen.
Clips can be transferred from the thumbnail screen or the filtered clip thumbnail screen.

3 Select the clip you want to transfer, then press the MENU button.
A transfer confirmation screen appears.

4 Select Execute.
The proxy file corresponding to the selected file is registered as a transfer job, and uploading begins.
When the transfer job is successfully registered, the transfer result screen appears.

5 Select OK.

To upload all files

Select All Clips instead of Select Clip in step 2 to transfer the proxy files corresponding to all the files.

[Note]
Up to 200 files can be transferred.

Uploading an original file on a memory card from the thumbnail screen

1 Connect the camcorder and device using a LAN connection (page 59).

2 Select Transfer Clip >Select Clip in the Thumbnail menu of the full menu.
The display changes from the full menu to the thumbnail screen.
Clips can be transferred from the thumbnail screen or the filtered clip thumbnail screen.

3 Select the clip you want to transfer, then press the MENU button.
A transfer confirmation screen appears.

4 Select Execute.
The selected file is registered as a transfer job, and uploading begins.
When the transfer job is successfully registered, the transfer result screen appears.

5 Select OK.

To upload all files

Select All Clips instead of Select Clip in step 2 to transfer all the files.

[Note]
Up to 200 files can be transferred.

Checking the file transfer

You can check the status of file transfer by selecting File Transfer >View Job List (page 103) in the Network menu of the full menu.
You can also check the status of file transfer from the Content Browser Mobile application screen.

[Tip]
If File Transfer >Auto Upload (Proxy) (page 103) in the Network menu of the full menu is set to On and a network connection exists, proxy files are automatically uploaded to the server specified using Default Upload Server (page 103) when recording ends.

[Notes]
- Up to 200 transfer jobs can be registered.
- The job list is retained when the camcorder is turned off, but up to 10 minutes of recent progress information may be lost if the battery pack is removed or the camcorder is powered off without first setting the POWER switch to STANDBY.
- Jobs added after the battery low voltage state are not saved in the job list.
- If an error occurs during file transfer, the transfer of a clip with the same name as a transferred clip may not be resumed depending on the settings and status of the transfer destination server. In this case, check the transfer destination server settings and status.

Uploading using Secure FTP

You can upload files with encryption using FTPS in Explicit mode (FTPES) for the connection with the destination file server.

Setting secure FTP transfer

For secure FTP transfer, set Using Secure Protocol on the destination file server to ON and import a certificate.
For details about configuration, see “Registering a file transfer destination” (page 64).

Thumbnail Screen

When you press the THUMBNAIL button (page 5), clips recorded on the memory card are displayed as thumbnails on the screen.
You can select a clip on the thumbnail screen and start playback of that clip. The playback image can be displayed in the viewfinder and on an external monitor.
Pressing the THUMBNAIL button again closes the thumbnail screen and returns to the camera image.

[Note]
Only the clips recorded in the currently selected recording format are displayed on the thumbnail screen. If an expected recorded clip is not displayed, check the recording format. Take special note of this fact before formatting (initializing) media.

Screen Layout

Information for the clip at the cursor position is displayed at the bottom of the screen.

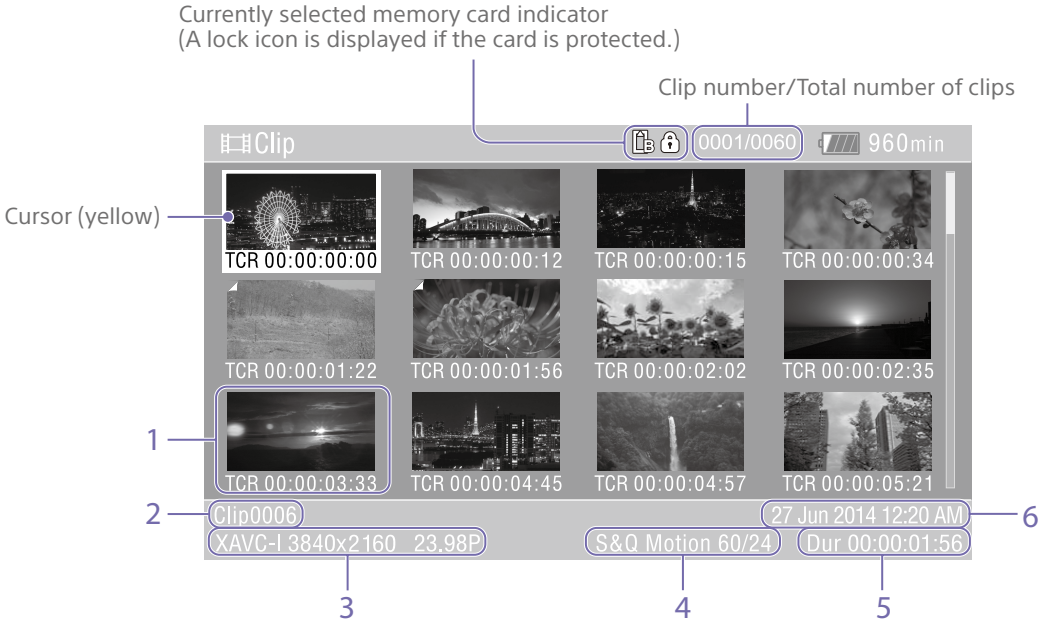

1. Thumbnail (index picture)
Displays the index picture of a clip. When a clip is recorded, its first frame is automatically set as the index picture.
Clip/frame information is displayed below the thumbnail. You can change the information displayed using Customize View (page 96) >Thumbnail Caption in the Thumbnail menu of the full menu.

2. Clip name
Displays the name of the selected clip.

3. Recording video format
Displays the file format of the selected clip.

4. Special recording information
Displays the recording mode only if the clip was recorded using a special recording mode. For Slow & Quick Motion clips, the frame rate is displayed on the right.

5. Clip duration

6. Creation date

Playing Clips

Playing Recorded Clips

You can play recorded clips when the camcorder is in recording standby (Stby) mode.

1 Insert the memory card to play.

2 Press the THUMBNAIL button.

3 Use the multi selector (page 7) or multi-function dial (page 5) to move the cursor to the thumbnail for the clip you want to play.

4 Press the multi selector apply button or multi-function dial.
Playback begins from the start of the selected clip.

You can control playback by pressing the following buttons.

Press the multi selector apply button or multi-function dial:
Pauses playback.
Press again to return to normal playback.

Press the multi selector left/right buttons:
Jumps to start of clip/start of next clip.

Press and hold the multi selector left/right buttons:
Fast reverse/forward.
Returns to normal playback when you release the button.

CANCEL/BACK button:
Stops playback, and returns to recording standby mode.

[Notes]

- There may be momentary picture breakup or still image display at the boundary between clips. You cannot operate the camcorder during this period.
- When you select a clip in the thumbnail screen and begin playback, there may be momentary picture breakup at the start of the clip. To view the start of the clip without breakup, put the camcorder into playback mode, pause, use the multi selector left button to return to the start of the clip, and start play again.

Clip Operations

On the thumbnail screen, you can operate the clips or check clip properties using the Thumbnail menu of the full menu.
The Thumbnail menu (page 96) appears when you press and hold the MENU button and select Thumbnail.

Thumbnail Menu Operations

Use the multi selector (page 7) or the multi-function dial (page 5) to select a function, then press the multi selector apply button or multi-function dial.
Press the CANCEL/BACK button (page 5) to return to the previous screen.

[Note]
Some items cannot be selected, depending on the state when the menu was displayed.

Menu Items for Clip Operations

- Display Clip Properties
- Set Clip Flag
- Lock/Unlock Clip
- Delete Clip
- Transfer Clip
- Transfer Clip (Proxy)
- Filter Clips
- Customize View

For details about clip operation menu items, see the Thumbnail menu (page 96).

Displaying clip properties

Select Display Clip Properties (page 96) in the Thumbnail menu to display the clip properties screen.

Adding clip flags

You can add clip flags (OK, NG or KP marks) to clips to filter the display of clips based on the clip flags.
Select the thumbnail for the clip to which you want to add a clip flag, then select the clip flag using Set Clip Flag (page 96) in the Thumbnail menu of the full menu.

Setting	Added clip flag
Add OK	OK
Add NG	NG
Add KEEP	KP

[Tips]
- You can also use an assignable button assigned with the clip flag function to add clip flags (page 49).
- You can add an OK clip flag (page 53) to the thumbnail of the selected clip by pressing the Clip Flag button (page 5).

Displaying the filtered clip thumbnail screen

Select Filter Clips (page 96) in the Thumbnail menu of the full menu, and select a clip flag type to display only those clips that have the specified flag.
To display all clips, select All.

[Tip]
You can also switch filters in sequence using the DISPLAY button.

Deleting clips

You can delete clips from memory cards.
Select Delete Clip >Select Clip or All Clips in the Thumbnail menu of the full menu.

Select Clip:
Deletes the selected clip. Multiple clip selection is supported.

All Clips:
Deletes all of the displayed clips.

Changing the information displayed on the thumbnail screen

You can change the clip/frame information displayed below the thumbnail.
Select Customize View >Thumbnail Caption in the Thumbnail menu of the full menu, and select the information to display.

Date Time:
Displays the date and time the clip was created and last modified.

Time Code:
Displays the timecode.

Duration:
Displays the duration of the clip.

Sequential Number:
Displays a sequential number on each thumbnail.

Full Menu Configuration and Hierarchy

Press and hold the MENU button to display the full menu in the viewfinder to specify various items for shooting, recording, and playback (menu can also be displayed on an external monitor). The full menu comprises the following menus.

Menu Configuration

User menu
: Contains menu items configured by the user using Edit User Menu.

Edit User menu
: Contains menu items for editing the User menu.

Shooting menu
: Contains settings related to shooting.

Project menu
: Contains basic project settings.

Paint/Look menu
: Contains settings related to image quality.

TC/Media menu
: Contains settings related to timecodes and recording media.

Monitoring menu
: Contains settings related to video output and the viewfinder display.

Audio menu
: Contains settings related to audio.

Thumbnail menu
: Contains settings related to thumbnail display.

Technical menu
: Contains settings for technical items.

Network menu
: Contains settings related to networks.

Maintenance menu
: Contains devices settings, such as the clock and language.

Full Menu Hierarchy

User (Factory settings)	Base Setting
	Focus
	S&Q Motion
	LUT On/Off
	Simul Rec
	Proxy Rec
	Interval Rec
	Assignable Button
	Assignable Dial
	Multi Function Dial
	All File
	Clip Name Format
	Format Media
	VF Setting
	Zebra
	Zoom
	Menu Settings
Edit User Menu	Add Item
	Customize Reset
Shooting	ISO/Gain/EI
	ND Filter
	Shutter
	Iris
	Auto Exposure
	White
	White Setting
	Offset White
	Focus
	S&Q Motion
	LUT On/Off
	Noise Suppression
	Flicker Reduce
	SteadyShot

Project	Base Setting
	Rec Format
	Cine EI Setting
	HDR Setting
	Simul Rec
	Proxy Rec
	Interval Rec
	Picture Cache Rec
	SDI/HDMI Rec Control
	Assignable Button
	Assignable Dial
	Multi Function Dial
	User File
	All File
Paint/Look	Scene File
	Base Look
	Reset Paint Settings
	Black
	Knee
	Detail
	Matrix
	Multi Matrix
TC/Media	Timecode
	TC Display
	Users Bit
	HDMI TC Out
	Clip Name Format
	Update Media
	Format Media

Monitoring	Output On/Off
	Output Format
	Output Display
	Display On/Off
	Marker
	VF Setting
	Gamma Display Assist
	Peaking
	Zebra
Audio	Audio Input
	Audio Output
Thumbnail	Display Clip Properties
	Set Clip Flag
	Lock/Unlock Clip
	Delete Clip
	Transfer Clip
	Transfer Clip (Proxy)
	Filter Clips
	Customize View
Technical	Color Bars
	ND Dial
	Tally
	HOLD Switch Setting
	Touch Operation
	Rec Review
	Zoom
	Handle Zoom
	Menu Settings
	Menu Page On/Off
	Fan Control
	Lens
	Video Light Set
	APR
	Camera Battery Alarm
	Camera DC IN Alarm

Network	Access Authentication
	Wireless LAN
	AP Mode Settings
	ST Mode Settings
	Wired LAN
	Modem
	File Transfer
	Network Reset
Maintenance	Language
	Clock Set
	All Reset
	Hours Meter
	Version

Full Menu Operations

Press and hold the MENU button to display the full menu in the viewfinder to specify detailed settings (menu can also be displayed on an external monitor).

Menu Controls

MENU button (page 5)
: Press and hold to display the full menu. Press again while the full menu is displayed to hide the menu.

Multi selector (8-way D-pad and apply buttons) (page 7)
: Press the 8-way D-pad buttons to move the cursor up/down/left/right to select menu items or settings.
Press the multi selector apply button to apply the selected item.

Multi-function dial (page 5)
: Turn the multi-function dial to move the cursor up/down to select menu items or settings.
Press the multi-function dial to apply the selected item.

CANCEL/BACK button (page 5)
: Press to return to the previous menu. An uncompleted change is canceled.

[Notes]
- The full menu cannot be operated when in focus magnifier mode (page 37).
- Some items cannot be selected, depending on the state when the menu was displayed.

Setting Menu Items

Press the 8-way D-pad buttons or turn the multi-function dial to move the cursor to the menu item to set, then press the apply button or multi-function dial to select the item.

- The menu item selection area displays up to eight lines. If the available options for an item cannot be displayed at the same time, scroll the display by moving the cursor up/down.
- For sub-items with a large settings range (for example, –99 to +99), the settings area is not displayed. The current setting is highlighted to indicate that the value can be changed.
- Selecting [Execute] for a function will execute the corresponding function.
- Selecting an item that requires confirmation before execution will temporarily hide the menu and display a confirmation message. Check the message, and then select whether to execute or cancel the function.

Entering a Character String

When you select an item, such as a file name, which requires character entry, the character entry screen appears.

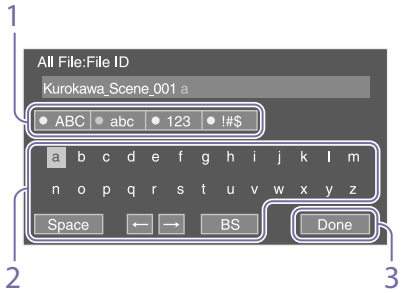

1 Press the 8-way D-pad buttons or turn the multi-function dial to select a character type, then apply the setting.
ABC: Uppercase alphabetic characters
abc: Lowercase alphabetic characters
123: Numeric characters
!#$: Special characters

2 Select a character from the selected character type, then apply the setting.
The cursor moves to the next field.
Space: Enters a space character at the cursor position.
←/→: Moves the position of the cursor.
BS: Deletes the character on the left of the cursor (backspace).

3 When finished, select [Done] and apply the setting.
The character string is confirmed and the character entry screen disappears.

Locking and Unlocking the Menu

You can lock the full menu so that only the User menu is displayed.
In this state, settings cannot be changed using the status screens.

Locking the menu

1 Press and hold the multi-function dial and press and hold the MENU button.

2 Select Menu Settings >User Menu with Lock in the Technical menu.

[Note]
When you press and hold only the MENU button to display the normal full menu, User Menu Only is displayed under Menu Settings in the Technical menu. Press and hold the multi-function dial and press and hold the MENU button to display User Menu with Lock.

3 Set to On, and press the apply button or multi-function dial.
The viewfinder screen display switches to the passcode number input screen.

4 Enter an arbitrary number.
Enter a 4-digit number in the range 0000 to 9999. The default value is 0000.
Enter a number and press the apply button or multi-function dial to move the cursor to the next digit.
When all digits have been entered, move the cursor to SET.

5 Press the apply button or multi-function dial.
The entry is applied.
A confirmation message appears, and the screen switches to the User menu display.

Unlocking the menu

1 Press and hold the multi-function dial and press and hold the MENU button.

2 Select Menu Settings >User Menu with Lock in the User menu.

[Note]
When you press and hold only the MENU button to display the normal full menu, User Menu Only is displayed under Menu Settings in the Technical menu. Press and hold the multi-function dial and press and hold the MENU button to display User Menu with Lock.

3 Set to Off, and press the apply button or multi-function dial.
The viewfinder screen display switches to the passcode number input screen.

4 Enter the passcode number used to lock the menu.
Enter a number and press the apply button or multi-function dial to move the cursor to the next digit.
When all digits have been entered, move the cursor to Set.

5 Press the apply button or multi-function dial.
The entry is applied.
If the entered passcode number matches the passcode number used to lock the menu, the menu is unlocked and the menu is displayed.

[Notes]
- If the entered passcode number does not match the passcode number used to lock the menu, the menu is not unlocked.
- It is recommended that you leave a record of the passcode nearby, just in case it is forgotten. If you do forget the passcode number, contact your Sony service representative.

- If the menu is locked without registering full menu items from the following table in the User menu, those functions cannot be assigned to assignable buttons.
- If those functions were already assigned to assignable buttons, the assignable setting is forcibly disabled at the point when the menu is locked.

Full menu item	Assignable button selection
Shooting >ISO/Gain/EI >Base Sensitivity, Shooting >ISO/Gain/EI> Base ISO	Base ISO/Sensitivity
Shooting >Auto Exposure >AGC	AGC
–	Auto ND Filter
Shooting >Iris >Bokeh Control	Bokeh Control
Shooting >Auto Exposure >Auto Shutter	Auto Shutter
Shooting >Auto Exposure >Level	Auto Exposure Level
Shooting >Auto Exposure >Mode	Backlight
Shooting >Auto Exposure >Mode	Spotlight
Shooting >White > Preset White	Preset White Select
Shooting >Focus > AF Transition Speed, Shooting >Focus > AF Subj. Shift Sens.	AF Speed/Sens.
Shooting >Focus > Focus Area	Focus Area
Shooting >Focus > Focus Area(AF-S)	Focus Area(AF-S)
Shooting >Focus > Face/Eye Detection AF	Face/Eye Detection AF
Shooting >Focus > Push AF Mode	Push AF Mode
Shooting >S&Q Motion >Setting	S&Q Motion
Shooting >SteadyShot >Setting	SteadyShot
Project >Picture Cache Rec >Setting	Picture Cache Rec
Technical >Rec Review >Setting	Rec Review
Thumbnail >Set Clip Flag >Add OK	Clip Flag OK
Thumbnail >Set Clip Flag >Add NG	Clip Flag NG
Thumbnail >Set Clip Flag >Add KEEP	Clip Flag Keep
Technical >Color Bars >Setting	Color Bars
Monitoring >Display On/Off >Lens Info	Lens Info
Monitoring >Display On/Off >Video Signal Monitor	Video Signal Monitor
Monitoring >Marker >Setting	Marker
Monitoring >VF Setting >Color Mode	VF Mode
Monitoring >Gamma Display Assist >Setting	Gamma Display Assist
Monitoring >Peaking >Setting	Peaking
Monitoring >Zebra >Setting	Zebra
Audio >Audio Output >Volume	Volume
Technical >Touch Operation >Setting	Touch Operation
Technical >Handle Zoom >Setting	Handle Zoom
Network >Wireless LAN >NFC	NFC
Network >File Transfer >Auto Upload (Proxy)	Auto Upload (Proxy)
User	User Menu

User Menu

This section describes the function and settings of each menu item.

User	
Item	Description
Base Setting	Project >Base Setting item
Focus	Shooting >Focus item
S&Q Motion	Shooting >S&Q Motion item
LUT On/Off	Shooting >LUT On/Off item
Simul Rec	Project >Simul Rec item
Proxy Rec	Project >Proxy Rec item
Interval Rec	Project >Interval Rec item
Assignable Button	Project >Assignable Button item
Assignable Dial	Project >Assignable Dial item
Multi Function Dial	Project >Multi Function Dial item
All File	Project >All File item
Clip Name Format	TC/Media >Clip Name Format item
Format Media	TC/Media >Format Media item
VF Setting	Monitoring >VF Setting item
Zebra	Monitoring >Zebra item
Zoom	Technical >Zoom item
Menu Settings	Technical >Menu Settings item
Edit User Menu	Displays the Edit User menu screen.

[Note]
You can add and remove menu items in the User menu using the Edit User menu. Up to 20 items can be configured.

Edit User Menu

The Edit User menu is displayed at the top level when Edit User Menu is selected in the User menu.

Edit User		
Item	Sub-item setting	Description
Add Item Add an item to the User menu		Adds a menu item to the User menu.
Customize Reset Reset the items in the User menu		Restores the menu items registered in the User menu to the factory default.
Menu item selected during editing	Delete	Deletes the registered menu item from the User menu.
	Move	Rearranges the registered menu items within the User menu.
	Edit Sub Item	Edits (register/delete) the registered menu sub-item in the User menu.

Shooting Menu

This section describes the function and settings of each menu item.
Factory default settings are shown in bold (for example, **18dB**).

Shooting >ISO/Gain/EI Sets gain settings.		
Item	Sub-item setting	Description
Mode	ISO/**dB**	Selects the gain setting mode.
ISO/Gain<H>	For details about settings, see “ISO/Gain Settings and Default Values” (page 105).	Sets the <H> gain preset value.
ISO/Gain<M>	For details about settings, see “ISO/Gain Settings and Default Values” (page 105).	Sets the <M> gain preset value.
ISO/Gain<L>	For details about settings, see “ISO/Gain Settings and Default Values” (page 105).	Sets the <L> gain preset value.
Exposure Index<H>	When Base ISO is set to ISO 800: 200EI / 4.0E 250EI / 4.3E 320EI / 4.7E 400EI / 5.0E 500EI / 5.3E 640EI / 5.7E 800EI / 6.0E 1000EI / 6.3E **1250EI / 6.7E** 1600EI / 7.0E 2000EI / 7.3E 2500EI / 7.7E 3200EI / 8.0E When Base ISO is set to ISO 12800: 3200EI / 4.0E 4000EI / 4.3E 5000EI / 4.7E 6400EI / 5.0E 8000EI / 5.3E 10000EI / 5.7E 12800EI / 6.0E 16000EI / 6.3E **20000EI / 6.7E** 25600EI / 7.0E 32000EI / 7.3E 40000EI / 7.7E 51200EI / 8.0E	Sets the <H> exposure index value. Available in Cine EI mode only.

Shooting >ISO/Gain/EI Sets gain settings.		
Item	Sub-item setting	Description
Exposure Index<M>	(Same settings as Exposure Index<H>) When Base ISO is set to ISO 800: **1000EI / 6.3E** When Base ISO is set to ISO 12800: **16000EI / 6.3E**	Sets the <M> exposure index value.
Exposure Index<L>	(Same settings as Exposure Index<H>) When Base ISO is set to ISO 800: **800EI / 6.0E** When Base ISO is set to ISO 12800: **12800EI / 6.0E**	Sets the <L> exposure index value.
Shockless Gain	On / **Off**	Turns the shockless gain function on/off.
Base Sensitivity	High / **Low**	Sets the base sensitivity for SDR/HDR mode.
Base ISO	ISO 12800 / **ISO 800**	Sets the base ISO sensitivity for Cine EI mode.

Shooting >ND Filter Sets the preset values for the ND filter.		
Item	Sub-item setting	Description
Preset1	**1/4** / 1/8 / 1/16 / 1/32 / 1/64 / 1/128	Sets the preset 1 value for the ND filter.
Preset2	1/4 / 1/8 / **1/16** / 1/32 / 1/64 / 1/128	Sets the preset 2 value for the ND filter.
Preset3	1/4 / 1/8 / 1/16 / 1/32 / **1/64** / 1/128	Sets the preset 3 value for the ND filter.

Shooting >Shutter Sets electronic shutter operating condition settings.		
Item	Sub-item setting	Description
Mode	**Speed** / Angle	Selects the operating mode of the electronic shutter. Used for shooting fast-moving subjects clearly. Selects the mode for setting the shutter speed in seconds (Speed) or as a shutter angle (Angle).
Shutter Speed On/Off	On / **Off**	Sets whether the exposure time when Speed mode is selected follows the Shutter Speed value or is set for full exposure.

Shooting >Shutter
Sets electronic shutter operating condition settings.

Item	Sub-item setting	Description
Shutter Speed	64F to 1/8000 The available settings vary depending on the frame frequency of the selected video format. 59.94P: 64F / 32F / 16F / 8F / 7F / 6F / 5F / 4F / 3F / 2F / 1/50 / **1/60** / 1/100 / 1/120 / 1/125 / 1/250 / 1/500 / 1/1000 / 1/2000 / 1/4000 / 1/8000 50P: 64F / 32F / 16F / 8F / 7F / 6F / 5F / 4F / 3F / 2F / **1/50** / 1/60 / 1/100 / 1/120 / 1/125 / 1/250 / 1/500 / 1/1000 / 1/2000 / 1/4000 / 1/8000 29.97P: 64F / 32F / 16F / 8F / 7F / 6F / 5F / 4F / 3F / 2F / **1/30** / 1/40 / 1/50 / 1/60 / 1/100 / 1/120 / 1/125 / 1/250 / 1/500 / 1/1000 / 1/2000 / 1/4000 / 1/8000 25P: 64F / 32F / 16F / 8F / 7F / 6F / 5F / 4F / 3F / 2F / **1/25** / 1/33 / 1/50 / 1/60 / 1/100 / 1/120 / 1/125 / 1/250 / 1/500 / 1/1000 / 1/2000 / 1/4000 / 1/8000 24P/23.98P: 64F / 32F / 16F / 8F / 7F / 6F / 5F / 4F / 3F / 2F / **1/24** / 1/32 / 1/48 / 1/50 / 1/60 / 1/96 / 1/100 / 1/120 / 1/125 / 1/250 / 1/500 / 1/1000 / 1/2000 / 1/4000 / 1/8000	Sets the shutter speed when Mode is set to Speed.
Shutter Angle	64F / 32F / 16F / 8F / 7F / 6F / 5F / 4F / 3F / 2F / 360.0° / 300.0° / 270.0° / 240.0° / 216.0° / 210.0° / **180.0°** / 172.8° / 150.0° / 144.0° / 120.0° / 90.0° / 86.4° / 72.0° / 45.0° / 30.0° / 22.5° / 11.25° / 5.6°	Sets the shutter angle when Mode is set to Angle.
ECS On/Off	On / **Off**	Turns the Extended Clear Scan function on/off.

Shooting >Shutter
Sets electronic shutter operating condition settings.

Item	Sub-item setting	Description
ECS Frequency	23.99 to 8000 The available settings vary depending on the frame frequency of the selected video format. The default values are given below. 59.94P: **60.00** 50P: **50.00** 29.97P: **30.00** 23.98P: **23.99** 25P: **25.02** 24P: **24.02**	Sets the ECS frequency when Mode is set to ECS.

Shooting >Iris
Sets bokeh control function settings.

Item	Sub-item setting	Description
Bokeh Control	On / **Off**	Turns the bokeh control function on/off.

Shooting >Auto Exposure
Sets automatic exposure adjustment settings.

Item	Sub-item setting	Description
Level	+3.0 / +2.75 / +2.5 / +2.25 / +2.0 / +1.75 / +1.5 / +1.25 / +1.0 / +0.75 / +0.5 / +0.25 / **±0** / –0.25 / –0.5 / –0.75 / –1.0 / –1.25 / –1.5 / –1.75 / –2.0 / –2.25 / –2.5 / –2.75 / –3.0	Sets the brightness level for the automatically detected exposure.
Mode	Backlight / **Standard** / Spotlight	Sets the operating mode of auto exposure adjustment. Backlight: Backlight mode (mode for reduced darkening of a subject when the subject is backlit) Standard: Standard mode Spotlight: Spotlight mode (mode for reduced clipped whites when subject is lit by spotlighting)
Speed	–99 to +99 (**±0**)	Sets the adjustment speed of auto exposure adjustment.

Shooting >Auto Exposure
Sets automatic exposure adjustment settings.

Item	Sub-item setting	Description
AGC	On / **Off**	Turns the AGC (auto gain control) function on/off.
AGC Limit	For details about settings, see “AGC Limit Settings and Default Values” (page 107).	Sets the maximum gain of the AGC function.
AGC Point	**F2.8** / F4 / F5.6	Sets the F-stop value of the iris where AGC operation starts when the AGC function is On.
Auto Shutter	On / **Off**	Turns the auto shutter control function on/off.
A.SHT Limit	1/100 / 1/150 / 1/200 / 1/250 / **1/2000**	Sets the fastest shutter speed of the auto shutter function.
A.SHT Point	F5.6 / F8 / **F11** / F16	Sets the F-stop value of the iris where auto shutter operation starts.
Clip High light	On / **Off**	Turns the function that ignores brightest areas to provide a flatter response at high luminance on/off.
Detect Window	**1** / 2 / 3 / 4 / 5 / 6 / Custom	Sets the light metering range for automatically adjusting the exposure according to the brightness of the subject. (Not available when adjusting exposure manually)
Detect Window Indication	On / **Off**	Turns the light metering range indication on/off.
Custom Width	40 to 999 (**500**)	Sets the width of the light metering range.
Custom Height	70 to 999 (**500**)	Sets the height of the light metering range.
Custom H Position	–479 to +479 (**±0**)	Sets the horizontal position of the light metering range.
Custom V Position	–464 to +464 (**±0**)	Sets the vertical position of the light metering range.

Shooting >White
Sets white balance settings.

Item	Sub-item setting	Description
Preset White	2000K to 15000K (**3200K**)	Sets the white balance preset value.
Color Temp <A>	2000K to 15000K (**3200K**)	Sets the white balance color temperature saved in memory A. [Note] Since Color Temp is clipped at 2000K and 15000K during R/B Gain operation, it may not be possible to display the correct Color Temp value for the R/B Gain value.
Tint<A>	–99 to +99 (**±0**)	Sets the white balance tint value saved in white memory A. [Note] Since Tint is clipped at ±99 during R/B Gain operation, it may not be possible to display the correct Tint value for the R/B Gain value.
R Gain <A>	–99.0 to +99.0 (**±0.0**)	Sets the white balance R gain value saved in memory A.
B Gain <A>	–99.0 to +99.0 (**±0.0**)	Sets the white balance B gain value saved in memory A.
Color Temp <B>	2000K to 15000K (**3200K**)	Sets the white balance color temperature saved in memory B. [Note] Since Color Temp is clipped at 2000K and 15000K during R/B Gain operation, it may not be possible to display the correct Color Temp value for the R/B Gain value.
Tint<B>	–99 to +99 (**±0**)	Sets the white balance tint value saved in white memory B. [Note] Since Tint is clipped at ±99 during R/B Gain operation, it may not be possible to display the correct Tint value for the R/B Gain value.
R Gain <B>	–99.0 to +99.0 (**±0.0**)	Sets the white balance R gain value saved in memory B.
B Gain <B>	–99.0 to +99.0 (**±0.0**)	Sets the white balance B gain value saved in memory B.

Shooting >White Setting
Adjusts white balance settings.

Item	Sub-item setting	Description
Shockless White	Off / 1 / **2** / 3	Sets the white balance response speed when switching white balance mode. Off: Switches instantaneously. 1 to 3: Switches more slowly the higher the number.
ATW Speed	1 / 2 / **3** / 4 / 5	Sets the response speed in ATW mode. 1: Fastest response speed
White Switch<B>	**Memory** / ATW	Selects the white balance adjustment mode that is selected when the WHT BAL switch is set to B.
Filter White Memory	On / **Off**	Turns the function that sets the white balance memory area for each ND filter on/off. On: Sets the white balance memory for each ND filter. [Tip] In preset mode, there are four settings (CLEAR/1/2/3). In variable mode, there are two settings (CLEAR/On). Off: Sets white balance memory common to all ND filters.

Shooting >Offset White
Sets white balance offset settings.

Item	Sub-item setting	Description
Offset White <A>	On / **Off**	Selects whether to add (On) or not to add (Off) an offset value to the white balance in memory A.
Offset Color Temp<A>	–99 to +99 (**±0**)	Sets the color temperature offset to be added to the white balance in memory A when Offset White <A> is set to On.
Offset Tint<A>	–99 to +99 (**±0**)	Sets the Tint value offset to be added to the white balance in memory A when Offset White <A> is set to On.
Offset White <B>	On / **Off**	Selects whether to add (On) or not to add (Off) an offset value to the white balance in memory B.
Offset Color Temp<B>	–99 to +99 (**±0**)	Sets the color temperature offset to be added to the white balance in memory B when Offset White <B> is set to On.

Shooting >Offset White
Sets white balance offset settings.

Item	Sub-item setting	Description
Offset Tint<B>	–99 to +99 (**±0**)	Sets the Tint value offset to be added to the white balance in memory B when Offset White <B> is set to On.
Offset White <ATW>	On / **Off**	Selects whether to add (On) or not to add (Off) an offset value to the ATW white balance.
Offset Color Temp<ATW>	–99 to +99 (**±0**)	Sets the color temperature offset to be added to the ATW white balance when Offset White <ATW> is set to On.
Offset Tint<ATW>	–99 to +99 (**±0**)	Sets the Tint value offset to be added to the ATW white balance when Offset White <ATW> is set to On.

Shooting >Focus
Sets focus settings.

Item	Sub-item setting	Description
AF Transition Speed	1(Slow) / 2 / 3 / 4 / **5** / 6 / 7(Fast)	Sets the speed of the focus drive for when the subject changes during auto focus.
AF Subj. Shift Sens.	1(Locked On) / 2 / 3 / 4 / **5(Responsive)**	Sets the sensitivity for changing subject focus during auto focus.
Focus Area	**Wide** / Zone / Flexible Spot	Sets the target area for auto focus and push auto focus (AF) (page 38). Wide: Searches for a subject over a wide angle of the image when focusing. Zone: Automatically searches for a focus point within the specified zone. Flexible Spot: Focuses on a specified position in the image.
Focus Area (AF-S)	**Flexible Spot**	Sets the target area for push auto focus (AF-S).
Face/Eye Detection AF	Face/Eye Only AF / **Face/Eye Priority AF** / Off	Enables/disables face detection AF.
Push AF Mode	**AF** / Single-shot AF(AF-S)	Sets the push auto focus mode during manual focus.

Shooting >Focus
Sets focus settings.

Item	Sub-item setting	Description
Touch Function in MF	**Tracking AF** / Spot Focus	Sets the action that occurs when the touch panel is tapped during manual focus.
AF Assist	**On** / Off	When set to On, allows you to temporarily override auto focus and set focus manually.

Shooting >S&Q Motion
Sets Slow & Quick Motion mode settings (page 50).

Item	Sub-item setting	Description
Setting	On / **Off**	Turns the Slow & Quick motion mode on/off. When set to On, the following functions are disabled. • Auto iris • Auto focus
Frame Rate	1fps to 60fps / 100fps / 120fps / 150fps / 180fps / 200fps / 240fps	Sets the frame rate for Slow & Quick Motion shooting. [Note] The available settings vary depending on the selected system frequency, codec, and video format.

Shooting >LUT On/Off
Sets LUT settings.

Item	Sub-item setting	Description
SDI/HDMI	MLUT On / **MLUT Off**	Selects whether to apply monitor LUT to the SDI and HDMI output video.
VF/Proxy/ Stream	MLUT On / **MLUT Off**	Selects whether to apply monitor LUT to the viewfinder, proxy, and stream output video.
Internal Rec	MLUT On / **MLUT Off**	Selects whether to apply monitor LUT to the internal recording video.

Shooting >Noise Suppression
Sets noise suppression settings.

[Tip]
The Setting(Custom) and Level(Custom) settings are reflected in the Target Display setting (page 109).

Item	Sub-item setting	Description
Setting (Custom)	**On** / Off	Turns the noise suppression function on/off in Custom mode.
Level (Custom)	Low / **Mid** / High	Sets the noise suppression level in Custom mode.
Setting (Cine EI)	On / **Off**	Turns the noise suppression function on/off in Cine EI mode.
Level (Cine EI)	Low / **Mid** / High	Sets the noise suppression level in Cine EI mode.

Shooting >Flicker Reduce
Sets flicker correction settings.

Item	Sub-item setting	Description
Mode	Auto / On / **Off**	Sets the flicker correction mode.
Frequency	50Hz / **60Hz**	Sets the frequency of the power source supplying the lighting that is causing the flicker.

Shooting >SteadyShot
Sets image stabilization settings.

Item	Sub-item setting	Description
Setting	Active / **Standard** / Off	Sets the image stabilization function. [Note] Enabled when a compatible lens is attached.

Project Menu

This section describes the function and settings of each menu item.
Factory default settings are shown in bold (for example, **18dB**).

Project >Base Setting
Sets base settings.

Item	Sub-item setting	Description
Shooting Mode	**Custom** / Cine EI	Sets the shooting mode (page 24).
Target Display	**SDR(BT.709)** / HDR(HLG)	Sets the color space of the recording/output in Custom mode.

Project >Rec Format
Sets recording format settings.

Item	Sub-item setting	Description
Frequency	**59.94** / 50 / 29.97 / 25 / 24 / 23.98	Selects the system frequency.
Imager Scan Mode	**FF** / S35	Sets the combination of imager readout method (all pixels/pixel binning) and imager size setting.
Codec	RAW / RAW & XAVC-I / RAW(HDMI) / RAW(HDMI) & XAVC-I / **XAVC-I** / XAVC-L	Sets the recording/playback mode.
RAW Output Format	The available settings vary depending on the Frequency and Codec settings.	Sets the resolution of the RAW output. [Note] When Codec is set to RAW & XAVC-I, the Video Format setting switches in link with the RAW Output Format setting.

Frequency	Codec	Selection options
59.94/ 50/ 29.97/ 25/ 23.98	RAW	4096×2160
		3840×2160
	RAW & XAVC-I	4096×2160
		3840×2160
	RAW(HDMI)	4240×2392
	RAW(HDMI) & XAVC-I	4240×2392
24	RAW	4096×2160
	RAW & XAVC-I	4096×2160

Project >Rec Format
Sets recording format settings.

Item	Sub-item setting			Description
Video Format	The available settings vary depending on the Frequency and Codec settings.			Sets the recording format.
	Frequency	Codec	Selection options	
	59.94	RAW/ RAW(HDMI)	–	
		RAW & XAVC-I	4096×2160P	
			3840×2160P	
		RAW(HDMI) & XAVC-I	3840×2160P	
		XAVC-I	4096×2160P	
			3840×2160P	
			1920×1080P	
		XAVC-L	3840×2160P	
			1920×1080P 50	
			1920×1080P 35	
	50	RAW/ RAW(HDMI)	–	
		RAW & XAVC-I	4096×2160P	
			3840×2160P	
		RAW(HDMI) & XAVC-I	3840×2160P	
		XAVC-I	4096×2160P	
			3840×2160P	
			1920×1080P	
		XAVC-L	3840×2160P	
			1920×1080P 50	
			1920×1080P 35	

Project >Rec Format Sets recording format settings.				
Item	Sub-item setting			Description
Video Format	29.97	RAW/ RAW(HDMI)	–	
		RAW & XAVC-I	4096×2160P	
			3840×2160P	
		RAW(HDMI) & XAVC-I	3840×2160P	
		XAVC-I	4096×2160P	
			3840×2160P	
			1920×1080P	
		XAVC-L	3840×2160P	
			1920×1080P 50	
			1920×1080P 35	
	25	RAW/ RAW(HDMI)	–	
		RAW & XAVC-I	4096×2160P	
			3840×2160P	
		RAW(HDMI) & XAVC-I	3840×2160P	
		XAVC-I	4096×2160P	
			3840×2160P	
			1920×1080P	
		XAVC-L	3840×2160P	
			1920×1080P 50	
			1920×1080P 35	

Project >Rec Format Sets recording format settings.				
Item	Sub-item setting			Description
Video Format	23.98	RAW/ RAW(HDMI)	–	
		RAW & XAVC-I	4096×2160P	
			3840×2160P	
		RAW(HDMI) & XAVC-I	3840×2160P	
		XAVC-I	4096×2160P	
			3840×2160P	
			1920×1080P	
		XAVC-L	3840×2160P	
			1920×1080P 50	
			1920×1080P 35	
	24	RAW/ RAW(HDMI)	–	
		RAW & XAVC-I	4096×2160P	
		RAW(HDMI) & XAVC-I	3840×2160P	
		XAVC-I	4096×2160P	

Project >Cine EI Setting Sets Cine EI mode settings.		
Item	Sub-item setting	Description
Color Gamut	S-Gamut3/SLog3 / **S-Gamut3.Cine/SLog3**	Sets the color space in Cine EI mode. S-Gamut3/SLog3: Sets the color space in Cine EI mode to S-Gamut3. S-Gamut3.Cine/SLog3: Sets the color space in Cine EI mode to S-Gamut3.Cine.

Project >HDR Setting Sets HDR mode settings.		
Item	Sub-item setting	Description
VF SDR Preview	On / **Off**	In HDR mode, this turns the function that converts the viewfinder image from HDR to SDR on/off when gamma display assist is enabled. [Tip] When set to On, SDR Gain is applied to the viewfinder image.
SDR Gain	0dB to –15dB (**–6dB**)	In HDR mode, this sets the SDR Gain setting that is applied to the viewfinder when VF SDR Preview is set to On.

Project >Simul Rec Sets simultaneous recording mode settings (page 52).		
Item	Sub-item setting	Description
Setting	On / **Off**	Turns the simultaneous recording function on/off and sets the recording destination media.
Rec Button Set	**Rec Button:[SlotA SlotB] Handle Rec Button:[SlotA SlotB]** / Rec Button:[SlotA] Handle Rec Button:[SlotB] / Rec Button:[SlotB] Handle Rec Button:[SlotA]	Assigns the record buttons used to control each recording media.

Project >Proxy Rec Sets proxy recording mode settings.		
Item	Sub-item setting	Description
Setting	On / **Off**	Turns proxy recording mode on/off.
Audio Channel	**CH1/CH2** / CH3/CH4	Selects the audio channel to record to proxy data.

Project >Interval Rec Sets interval recording mode settings (page 50).		
Item	Sub-item setting	Description
Setting	On / **Off**	Turns interval recording mode on/off. (Setting this mode to On will set all other special modes to Off.)
Interval Time	**1** / 2 / 3 / 4 / 5 / 6 / 7 / 8 / 9 / 10 / 15 / 20 / 30 / 40 / 50 (s) 1 / 2 / 3 / 4 / 5 / 6 / 7 / 8 / 9 / 10 / 15 / 20 / 30 / 40 / 50 (min) 1 / 2 / 3 / 4 / 6 / 12 / 24 (h)	Sets the interval between recordings in Interval Rec recording mode (when Interval Rec is set to On).

Project >Interval Rec Sets interval recording mode settings (page 50).		
Item	Sub-item setting	Description
Number of Frames	1frame / 2frames / 3frames / 6frames / 9frames / 12frames The available settings vary depending on the frame frequency of the selected video format. 59.94P/50P: **2frames** / 6frames / 12frames 29.97P/25P/24P/23.98P: **1frame** / 3frames / 6frames / 9frames	Sets the number of frames to record per take in Interval Rec recording mode (when Interval Rec is set to On).
Pre-Lighting	**Off** / 2 s / 5 s / 10 s	Sets the number of seconds that the video light turns on before recording starts in Interval Rec recording mode. [Tip] Available only when using the HVL-LBPC (option).

Project >Picture Cache Rec Sets picture cache recording mode settings (page 51).		
Item	Sub-item setting	Description
Setting	On / **Off**	Turns picture cache recording mode on/off.
Cache Size	Short / Medium / Long / **Max**	Sets the time for accumulation of images in picture cache memory (picture cache recording time).
Cache Rec Time		Displays the time for accumulation of images in picture cache memory (picture cache recording time).

Project >SDI/HDMI Rec Control
Sets SDI/HDMI recording control settings.

Item	Sub-item setting	Description
Setting	**Off** / SDI/HDMI Remote I/F / Parallel Rec	Sets recording start/stop control of an external device via the SDI/HDMI output signal. Off: Do not use remote control. SDI/HDMI Remote I/F: Record stop/start control of an external connected device, when there is no media inserted in the camcorder. Not synchronized with frame accuracy to camcorder media. Parallel Rec: Record stop/start control of an external connected device, when media is inserted in the camcorder. Synchronized with frame accuracy to camcorder media. [Note] For control using the HDMI output signal, set HDMI TC Out >Setting (page 89) in the TC/Media menu of the full menu to On.

Project >Assignable Button
Sets function assignments to assignable buttons.

Item	Sub-item setting	Description
<1> to <9>, Focus Hold Button	Off / Base ISO/Sensitivity / AGC / Push AGC / ND Filter Position / Auto ND Filter / Push Auto ND / Auto Iris / Push Auto Iris / Bokeh Control / Auto Shutter / Auto Exposure Level / Backlight / Spotlight / Preset White Select / ATW / ATW Hold / AF Speed/Sens. / Focus Setting / Focus Area / Focus Area(AF-S) / Face/Eye Detection AF / Push AF Mode / Push AF/Push MF / Focus Hold / Focus Magnifier x3/x6 / Focus Magnifier x3 / Focus Magnifier x6 / S&Q Motion / SteadyShot / Rec / Picture Cache Rec / Rec Review / Clip Flag OK / Clip Flag NG / Clip Flag Keep / Color Bars / Tally [Front] / DURATION/TC/U-BIT / Display / Lens Info / Video Signal Monitor / Marker / VF Adjust / VF Mode / Gamma Display Assist / Peaking / Zebra / Volume / Thumbnail / Touch Operation / Handle Zoom / NFC / Auto Upload (Proxy) / Direct Menu / User Menu / Menu	Assigns functions to assignable buttons. Base ISO/Sensitivity: Switches the base sensitivity of the image sensor. AGC: Turns the AGC function on/off. Push AGC: Enables the AGC function while the button is pressed. ND Filter Position: Switches ND filters. Auto ND Filter: Turns the auto ND filter function on/off. Push Auto ND: Enables the auto ND filter function while the button is pressed. Auto Iris: Turns the iris function on/off. Push Auto Iris: Enables the auto iris function while the button is pressed. Bokeh Control: Turns the bokeh control mode on/off. Auto Shutter: Turns the auto shutter function on/off. Auto Exposure Level: Displays/exits the Auto Exposure Level direct menu. Backlight: Switches between Backlight and Standard. Spotlight: Switches between Spotlight and Standard. Preset White Select: Switches the white balance preset mode value. ATW: Turns the ATW function on/off.

Project >Assignable Button
Sets function assignments to assignable buttons.

Item	Sub-item setting	Description
<1> to <9>, Focus Hold Button		ATW Hold: Pauses ATW function operation. AF Speed/Sens.: Switches the AF transition speed setting and AF subject shift sensitivity setting. Focus Setting: Sets the focus area. Focus Area: Sets the focus area for AF and push AF. Focus Area(AF-S): Sets the focus area for push AF (AF-S). Face/Eye Detection AF: Switches the face/eye detection AF settings. Push AF Mode: Switches the Push AF mode setting. Push AF/Push MF: In MF focus mode, activates AF while the button is pressed. In AF focus mode, activates MF while the button is pressed. Focus Hold: In AF focus mode, focus is fixed while the button is pressed. Focus Magnifier x3/x6: Focus Magnifier x3: Focus Magnifier x6: Turns the focus magnifier function on/off. S&Q Motion: Turns Slow & Quick Motion on/off. Sets the shooting frame rate when pressed and held. SteadyShot: Switches between Active, Standard, and Off. Rec: Starts/stops recording.

Project >Assignable Button
Sets function assignments to assignable buttons.

Item	Sub-item setting	Description
<1> to <9>, Focus Hold Button		Picture Cache Rec: Turns picture cache recording mode on/off. Rec Review: Turns the Rec Review function on/off. Clip Flag OK: Executes the Add OK function. Press twice to execute Delete Clip Flag. Clip Flag NG: Executes the Add NG function. Press twice to execute Delete Clip Flag. Clip Flag Keep: Executes the Add Keep function. Press twice to execute Delete Clip Flag. Color Bars: Turns the color bars on/off. Tally [Front]: Turns the recording/tally lamp light/flashing function on/off. DURATION/TC/U-BIT: Switches between Time Code, Users Bit, and Duration. Display: Turns the screen indicators on/off. Lens Info: Switches the depth-of-field indicator. Video Signal Monitor: Switches the video signal monitor (such as a waveform monitor). Marker: Turns the marker function on/off. VF Adjust: Displays the level bars for adjusting the brightness of the viewfinder screen. VF Mode: Switches the viewfinder display between color and B&W.

Project >Assignable Button
Sets function assignments to assignable buttons.

Item	Sub-item setting	Description
<1> to <9>, Focus Hold Button		Gamma Display Assist: Switches the gamma display assist function. Peaking: Turns the peaking function on/off. Zebra: Turns the Zebra function on/off. Volume: Adjusts the monitor audio level output to the headphone jack and built-in speaker. Thumbnail: Displays/exits the thumbnail screen. Touch Operation: Turns touch operation on/off. Handle Zoom: Switches the handle zoom operation. NFC: Executes the NFC function. Auto Upload (Proxy): Turns proxy file auto transfer on/off. Direct Menu: Displays/exits the direct menu. User Menu: Displays/exits the User menu. Menu: Displays/exits the full menu.

Project >Assignable Dial
Sets function assignments for assignable dial and sets rotation direction.

Item	Sub-item setting	Description
Grip/Remote Dial	Off / ISO/Gain/EI / ND Filter / **IRIS** / Auto Exposure Level / Audio Input Level / Multi Function Dial	Assigns functions to the grip assignable dial. ISO/Gain/EI: Adjusts the gain or EI. ND Filter: Adjusts the ND filter. IRIS: Adjusts the iris. Auto Exposure Level: Adjusts the auto exposure level. Audio Input Level: Adjusts the audio recording level. Multi Function Dial: Functions as a multi-function dial.
Grip Dial Direction	**Normal** / Opposite	Sets the direction of rotation of the grip assignable dial. Normal: Turn in normal direction. Opposite: Turn in opposite direction.
Handle Dial	Off / ISO/Gain/EI / ND Filter / **IRIS** / Auto Exposure Level / Audio Input Level / Multi Function Dial	Assigns functions to the handle assignable dial. ISO/Gain/EI: Adjusts the gain or EI. ND Filter: Adjusts the ND filter. IRIS: Adjusts the iris. Auto Exposure Level: Adjusts the auto exposure level. Audio Input Level: Adjusts the audio recording level. Multi Function Dial: Functions as a multi-function dial.
Handle Dial Direction	**Normal** / Opposite	Sets the direction of rotation of the handle assignable dial. Normal: Turn in normal direction. Opposite: Turn in opposite direction.

Project >Multi Function Dial
Assigns functions to the multi-function dial.

Item	Sub-item setting	Description
Default Function	**Off** / IRIS / ISO/Gain/EI / Auto Exposure Level / Audio Input Level	Assigns the default function to the multi-function dial. IRIS: Adjusts the iris. ISO/Gain/EI: Adjusts the gain or EI. Auto Exposure Level: Adjusts the auto exposure level. Audio Input Level: Adjusts the audio recording level.

Project >User File
Sets settings related to user file operations.

Item	Sub-item setting	Description
Load Media(B)	Execute / Cancel	Loads user file settings from a memory card inserted into CFexpress Type A/SD card slot (B). Execute: Execute function.
Save Media(B)	Execute / Cancel	Saves user file settings to a memory card inserted into CFexpress Type A/SD card slot (B). Execute: Execute function.
File ID		Displays a screen for displaying/editing the file ID of user files.
Load Customize Data	On / **Off**	Sets whether to load User menu customized information when Load Media(B) is executed.
Load White Data	On / **Off**	Sets whether to load white balance information when Load Media(B) is executed.

Project >All File
Sets settings related to ALL files.

Item	Sub-item setting	Description
Load Media(B)	Execute / Cancel	Loads an ALL file Execute: Execute function.
Save Media(B)	Execute / Cancel	Saves an ALL file. Execute: Execute function.
File ID		Assigns a name to the file.
Load Network Data	On / **Off**	Sets whether to load Network menu settings information when Load Media(B) is executed.

Paint/Look Menu

This section describes the function and settings of each menu item.
Factory default settings are shown in bold (for example, **18dB**).

Paint/Look >Scene File Sets settings related to scene files.		
Item	Sub-item setting	Description
Recall		Loads a scene file stored in internal memory and applies the settings as the current image quality settings.
Store		Saves the current image quality state as a scene file in internal memory.
Delete		Deletes a scene file stored in internal memory.
Preset Recall	When Shooting Mode is set to Custom and Target Display is set to SDR(BT.709): S-Cinetone / Standard / Still / ITU709 When Shooting Mode is set to Custom and Target Display is set to HDR(HLG): HLG Live / HLG Natural	Applies preset image quality settings (non-rewritable) as the current image quality settings.

Paint/Look >Base Look Sets settings related to the base look.		
Item	Sub-item setting	Description
Select	When Shooting Mode is set to Custom and Target Display is set to SDR(BT.709): **S-Cinetone** / Standard / Still / ITU709 / User1 to User16 When Shooting Mode is set to Custom and Target Display is set to HDR(HLG): **HLG Live** / HLG Natural / User1 to User16 When Shooting Mode is set to Cine EI: **s709** / 709(800) / S-Log3 / User1 to User16	Selects a base look.
Delete		Deletes the selected base look.
Delete All		Deletes all base looks.
Import		Loads a base look file from recording media.
Input	S-Gamut3/SLog3 / **S-Gamut3.Cine/SLog3**	Sets the input gamut for the selected base look.
Output	**BT.709** / HLG	Sets the output color gamut for the selected base look.
AE Level Offset	**0EV** / 1/3EV / 2/3EV / 1EV / 4/3EV / 5/3EV / 2EV	Sets the exposure reference value for the selected base look.

Paint/Look >Reset Paint Settings Resets the Paint/Look menu settings, excluding the base look.		
Item	Sub-item setting	Description
Reset without Base Look	Execute / Cancel	Resets the Paint/Look menu settings, excluding the base look. Execute: Execute function.

Paint/Look >Black Sets black settings.		
Item	Sub-item setting	Description
Master Black	–99.0 to +99.0 (**±0.0**)	Sets the master black level.
R Black	–99.0 to +99.0 (**±0.0**)	Sets the R black level.
B Black	–99.0 to +99.0 (**±0.0**)	Sets the B black level.

Paint/Look >Knee Sets knee correction settings.		
Item	Sub-item setting	Description
Setting	When Target Display is set to SDR(BT.709): On / **Off** / --- When Target Display is set to HDR(HLG): On / **Off** / ---	Turns the knee correction function on/off. [Tip] Enabled only when Base Look >Select is set to Standard or ITU709.
Auto Knee	When Target Display is set to SDR(BT.709): **On** / Off / --- When Target Display is set to HDR(HLG): On / **Off** / ---	Turns the auto knee function on/off.
Point	75% to 109% (**90%**)	Sets the knee point.
Slope	–99 to +99 (**±0**)	Sets the knee slope.

Paint/Look >Detail
Sets detail adjustment settings.

Item	Sub-item setting	Description
Setting	**On** / Off	Turns the detail function on/off.
Level	–7 to +7 (**±0**)	Sets the detail level.
Manual Setting	On / **Off** / ---	Turns the detail manual adjustment function on/off.
V/H Balance	–2 to +2 (**±0**)	Sets the balance between vertical (V) and horizontal (H) detail for detail manual adjustment.
B/W Balance	Type1 / Type2 / **Type3** / Type4 / Type5	Sets the balance between black (B) detail for low-luminance areas and white (W) detail for high-luminance areas for detail manual adjustment.
Limit	0 to **7**	Sets the limit level of the detail for detail manual adjustment.
Crispening	**0** to 7	Sets the crispening level for detail manual adjustment.
High Light Detail	**0** to 4	Sets the detail level of high-luminance areas for detail manual adjustment.

Paint/Look >Matrix
Sets matrix correction settings.

Item	Sub-item setting	Description
User Matrix	On / **Off**	Turns the user matrix correction function on/off.
User Matrix Level	–99 to +99 (**±0**)	Adjusts the color saturation of the entire image.
User Matrix Phase	–99 to +99 (**±0**)	Adjusts the color tone (phase) of the entire image.
User Matrix R-G	–99 to +99 (**±0**)	Sets a user-defined R-G user matrix.
User Matrix R-B	–99 to +99 (**±0**)	Sets a user-defined R-B user matrix.
User Matrix G-R	–99 to +99 (**±0**)	Sets a user-defined G-R user matrix.
User Matrix G-B	–99 to +99 (**±0**)	Sets a user-defined G-B user matrix.
User Matrix B-R	–99 to +99 (**±0**)	Sets a user-defined B-R user matrix.
User Matrix B-G	–99 to +99 (**±0**)	Sets a user-defined B-G user matrix.

Paint/Look >Multi Matrix
Sets multi matrix correction settings.

Item	Sub-item setting	Description
Setting	On / **Off**	Turns the multi matrix correction function on/off.
Reset	Execute / Cancel	Resets the hue and saturation of each axis color to the default values.
Axis	**B** / B+ / MG– / MG / MG+ / R / R+ / YL– / YL / YL+ / G– / G / G+ / CY / CY+ / B–	Selects the axis.
Hue	–99 to +99 (**±0**)	Sets the hue of the color used for multi matrix correction.
Saturation	–99 to +99 (**±0**)	Sets the saturation of the color used for multi matrix correction.

TC/Media Menu

This section describes the function and settings of each menu item.
Factory default settings are shown in bold (for example, **18dB**).

TC/Media >Timecode Sets timecode settings.		
Item	Sub-item setting	Description
Mode	**Preset** / Regen / Clock	Sets the timecode running mode. Preset: Starts running from a preset value. Regen: Starts running from the timecode of the end of the previous clip. Clock: Uses the internal clock as the timecode.
Run	**Rec Run** / Free Run	Rec Run: Runs only when recording. Free Run: Always running, regardless of camcorder operation.
Setting		Sets the timecode to an arbitrary value. SET: Set the value.
Reset	Execute / Cancel	Resets the timecode to 00:00:00:00. Execute: Execute function.
TC Format	**DF** / NDF	Sets the timecode format. DF: Drop Frame NDF: Non-Drop Frame

TC/Media >TC Display Sets time data display settings.		
Item	Sub-item setting	Description
Display Select	**Timecode** / Users Bit / Duration	Switches the time data display.

TC/Media >Users Bit Sets settings related to user bits.		
Item	Sub-item setting	Description
Mode	**Fix** / Time	Sets the user bit mode. Fix: Uses an arbitrary fixed value in user bits. Time: Uses the current time in user bits.
Setting		Sets the user bits to an arbitrary value.

TC/Media >HDMI TC Out Sets settings related to timecode output when using HDMI.		
Item	Sub-item setting	Description
Setting	On / **Off**	Sets whether to output the timecode to devices for other purposes, using HDMI.

TC/Media >Clip Name Format Sets settings related to clip naming and deletion.		
Item	Sub-item setting	Description
Title Prefix	**nnn_** (nnn is the last 3 digits of the serial number) (Max. 7-digit display)	Sets the title part (4 to 46 characters) of the clip name. Opens a character string entry screen. **Character string entry screen structure** Character selection area (3 lines): Selects the characters to insert at the cursor position of the Title Prefix area. !#$%()+.-.;=@[ ]^_~0123456789 abcdefghijklmnopqrstuvwxyz ABCDEFGHIJKLMNOPQRSTUVWXYZ Cursor operation area (1 line): Space: Inserts a space at the cursor position. ←: Moves the cursor to the left. →: Moves the cursor to the right. BS: Deletes the character to the left of the cursor position. Title Prefix area (1 line): Area for entering the title. **To set the title** 1. Select the character to insert at the cursor position in the Title Prefix area from the character selection area using the multi selector (page 7), and press the multi selector apply button. (The selected character is inserted, and the cursor moves to the right.) 2. Repeat step 1 to set the title. (Use BS as required.) 3. After setting the title, select Done to close the character entry screen.

TC/Media >Clip Name Format Sets settings related to clip naming and deletion.		
Item	Sub-item setting	Description
Number Set	**0001** to 9999	Sets the 4-digit number suffix of the clip name.

TC/Media >Update Media Updates the management file on memory cards.		
Item	Sub-item setting	Description
Media(A)	Execute / Cancel	Updates the management file on the memory card in slot A. Execute: Execute function.
Media(B)	Execute / Cancel	Updates the management file on the memory card in slot B. Execute: Execute function.

TC/Media >Format Media Initializes memory cards.		
Item	Sub-item setting	Description
Media(A)	Full Format / Quick Format / Cancel	Formats the memory card in slot A.
Media(B)	Full Format / Quick Format / Cancel	Formats the memory card in slot B.

Monitoring Menu

This section describes the function and settings of each menu item.
Factory default settings are shown in bold (for example, **18dB**).

Monitoring >Output On/Off Sets video output settings.		
Item	Sub-item setting	Description
SDI	**On** / Off	Turns the SDI output on/off.
HDMI	**On** / Off	Turns HDMI output on/off.

Monitoring >Output Format Sets output format settings.		
Item	Sub-item setting	Description
SDI	For details about settings, see “Output Formats and Limitations” (page 115).	Sets the SDI and HDMI output resolution.
HDMI		

Monitoring >Output Display Sets screen display output settings.		
Item	Sub-item setting	Description
SDI	On / **Off**	Sets whether the menu, status, and screen display are embedded in the SDI output signal.
HDMI	On / **Off**	Sets whether the menu, status, and screen display are embedded in the HDMI output signal.

Monitoring >Display On/Off Sets display item settings.		
Item	Sub-item setting	Description
Network Status	**On** / Off	Selects the items to display in the viewfinder.
File Transfer Status	**On** / Off	
Rec/Play Status	**On** / Off	
RAW Output Control Status	**On** / Off	
Tally	**On** / Off	
Battery Remain	**On** / Off	
Focus Mode	**On** / Off	
Focus Position	**On** / Off	
Focus Area Indicator	**On** / Off	
Focus Area Ind.(AF-S)	**On** / Off	
Face/Eye Detection Frame	**On** / Off	
Lens Info	On / **Off**	
Imager Scan Mode	**On** / Off	
Rec Format	**On** / Off	
Frame Rate	**On** / Off	
Zoom Position	**On** / Off	
UWP RF Level	**On** / Off	
SteadyShot	**On** / Off	
Base Look/ LUT	**On** / Off	
SDI/HDMI Rec Control	**On** / Off	

Monitoring >Display On/Off
Sets display item settings.

Item	Sub-item setting	Description
Gamma Display Assist	**On** / Off	
Proxy Status	**On** / Off	
Base ISO/ Sensitivity	**On** / Off	
Media Status	**On** / Off	
Video Signal Monitor	**Off** / Waveform / Vector / Histogram	
Clip Name	**On** / Off	
White Balance	**On** / Off	
Scene File	**On** / Off	
Focus Indicator	**On** / Off	
Auto Exposure Mode	**On** / Off	
Auto Exposure Level	**On** / Off	
Timecode	**On** / Off	
ND Filter	**On** / Off	
Iris	**On** / Off	
ISO/Gain/EI	**On** / Off	
Shutter	**On** / Off	
Level Gauge	**On** / Off	
Audio Level Meter	**On** / Off	
Video Level Warning	**On** / Off	
Clip Number	**On** / Off	
Notice Message	**On** / Off	

Monitoring >Marker
Sets marker display settings.

Item	Sub-item setting	Description
Setting	**On** / Off	Turns the display of all markers on/off.
Color	**White** / Yellow / Cyan / Green / Magenta / Red / Blue	Selects the marker signal color.
Center Marker	1 / 2 / 3 / 4 / **Off**	Selects the center marker.
Safety Zone	On / **Off**	Turns the safety zone marker on/off.
Safety Area	80% / **90%** / 92.5% / 95%	Selects the size of the safety zone marker (as a percentage of total screen size).
Aspect Marker	Line / Mask / **Off**	Selects the type of aspect marker.
Aspect Mask	0 to 15 (**12**)	Sets the level of the video signal outside the marker.
Aspect Safety Zone	On / **Off**	Turns the aspect safety zone marker on/off.
Aspect Safety Area	80% / **90%** / 92.5% / 95%	Selects the size of the aspect safety zone marker (as a percentage of total screen size).
Aspect Select	1:1 / 4:3 / 13:9 / 14:9 / 15:9 / 16:9 / 17:9 / 1.66:1 / 1.85:1 / 2.35:1 / **2.39:1** / Custom	Sets the mode when displaying the aspect marker.
Custom Aspect Ratio	Enter arbitrary value (**01.00:01.00**)	Sets the aspect ratio to an arbitrary value. [Note] This setting is enabled when Aspect Select is set to Custom.
Guide Frame	On / **Off**	Turns the guide frame display on/off.
100% Marker	On / **Off**	Turns the 100% marker on/off.
User Box	On / **Off**	Turns the user box marker display on/off.
User Box Width	3 to 479 (**240**)	Sets the user box marker width (distance from the center to the left and right edges).
User Box Height	3 to 269 (**135**)	Sets the user box marker height (distance from the center to the top and bottom edges).
User Box H Position	–476 to +476 (**0**)	Sets the horizontal position of the center of the user box marker.
User Box V Position	–266 to +266 (**0**)	Sets the vertical position of the center of the user box marker.

Monitoring >VF Setting Sets viewfinder settings.		
Item	Sub-item setting	Description
Brightness	1 to 15 (**8**)	Adjusts the brightness of the viewfinder image.
Color Mode	**Color** / B&W	Selects the display mode of the viewfinder in E-E/recording mode.

Monitoring >Gamma Display Assist Sets gamma display assist settings.		
Item	Sub-item setting	Description
Setting	**On** / Off	Turns the gamma display assist function on/off in Custom mode when Target Display is set to HDR(HLG).

Monitoring >Peaking Sets peaking settings.		
Item	Sub-item setting	Description
Setting	On / **Off**	Turns the peaking function on/off.
Peaking Level	High / **Mid** / Low	Sets the color peaking signal level.
Color	**B&W** / Red / Yellow / Blue	Selects the color of the color peaking signal.

Monitoring >Zebra Sets zebra pattern settings.		
Item	Sub-item setting	Description
Setting	**Off** / Zebra1 / Zebra2	Selects the zebra pattern type (Off, Zebra 1, Zebra 2).
Zebra1 Level	0% to 109% (**70%**)	Sets the Zebra 1 display level.
Zebra1 Aperture Level	2% to 20% (**10%**)	Sets the Zebra 1 aperture level.
Zebra2 Level	0% to 109% (**100%**)	Sets the Zebra 2 display level.

Audio Menu

This section describes the function and settings of each menu item.
Factory default settings are shown in bold (for example, **18dB**).
Refer to “Block Diagrams” (page 129).

Audio >Audio Input
Sets audio input settings.

Item	Sub-item setting	Description
CH1 Input Select	INPUT1 / **Internal MIC** / Shoe CH1	Switches the input source for recording on channel 1.
CH2 Input Select	INPUT1 / INPUT2 / **Internal MIC** / Shoe CH2	Switches the input source for recording on channel 2.
CH3 Input Select	Off / INPUT1 / **Internal MIC** / Shoe CH1	Switches the input source for recording on channel 3.
CH4 Input Select	Off / INPUT1 / INPUT2 / **Internal MIC** / Shoe CH2	Switches the input source for recording on channel 4.
INPUT1 MIC Reference	–80dB / –70dB / –60dB / **–50dB** / –40dB / –30dB	Sets the reference recording level for XLR microphone input from INPUT1.
INPUT2 MIC Reference	–80dB / –70dB / –60dB / **–50dB** / –40dB / –30dB	Sets the reference recording level for XLR microphone input from INPUT2.
Line Input Reference	**+4dB** / 0dB / –3dB / EBUL	Selects the reference input level when the INPUT1/INPUT2 switch is set to LINE.
Reference Level	**–20dB** / –18dB / –16dB / –12dB / EBUL	Selects the recording level of the 1 kHz reference tone signal.
CH1 Wind Filter	On / **Off**	Enables/disables the wind reduction filter for channel 1 recording.
CH2 Wind Filter	On / **Off**	Enables/disables the wind reduction filter for channel 2 recording.
CH3 Wind Filter	On / **Off**	Enables/disables the wind reduction filter for channel 3 recording.
CH4 Wind Filter	On / **Off**	Enables/disables the wind reduction filter for channel 4 recording.
CH3 Level Control	**Auto** / Manual	Selects automatic audio input level adjustment or manual adjustment for recording channel 3. [Note] If both CH3 Input Select and CH4 Input Select are set to Internal MIC, CH4 is switched to automatic/manual in conjunction with this setting.

Audio >Audio Input
Sets audio input settings.

Item	Sub-item setting	Description
CH4 Level Control	**Auto** / Manual	Selects automatic audio input level adjustment or manual adjustment for recording channel 4. [Note] If both CH3 Input Select and CH4 Input Select are set to Internal MIC, CH4 is switched to automatic/manual in conjunction with the CH3 Level Control setting.
CH3 Input Level	0 to 99 (**49**)	Sets the input level for recording channel 3.
CH4 Input Level	0 to 99 (**49**)	Sets the input level for recording channel 4.
Audio Input Level	0 to **99**	Sets the audio input level. Can be used as the master volume, according to the settings of CH1 Level to CH4 Level.
Limiter Mode	**Off** / –6dB / –9dB / –12dB / –15dB / –17dB	Selects the limiter characteristic for large input signals when adjusting the audio input level manually.
CH1&2 AGC Mode	Mono / **Stereo**	Sets the auto level adjustment mode for recording channel 1 and channel 2. When set to Stereo, the AGC is linked between channels.
CH3&4 AGC Mode	Mono / **Stereo**	Sets the auto level adjustment mode for recording channel 3 and channel 4. When set to Stereo, the AGC is linked between channels.
AGC Spec	**–6dB** / –9dB / –12dB / –15dB / –17dB	Selects the AGC characteristic.
1kHz Tone on Color Bars	On / **Off**	Turns the 1 kHz reference tone signal on/off when displaying color bars. [Note] When set to On, the 1 kHz reference tone signal is set for recording on channel 3 and channel 4, even if CH3 Input Select and CH4 Input Select are set to Off.

Audio >Audio Input Sets audio input settings.		
Item	Sub-item setting	Description
CH1 Level	Input without XLR adaptor Audio Input Level / Side / **Level+Side** Input with XLR adaptor (page 48) **Audio Input Level** / Through	Sets the combination of audio input level adjustments enabled for recording channel 1. [Note] "Side" refers to the AUDIO LEVEL (CH1) dial on the side of the camcorder. When Level+Side is selected, the audio recording level is determined by the combination of the Audio Input Level and dial settings (page 129).
CH2 Level	Input without XLR adaptor Audio Input Level / Side / **Level+Side** Input with XLR adaptor (page 48) **Audio Input Level** / Through	Sets the combination of audio input level adjustments enabled for recording channel 2. [Note] "Side" refers to the AUDIO LEVEL (CH2) dial on the side of the camcorder. When Level+Side is selected, the audio recording level is determined by the combination of the Audio Input Level and dial settings (page 129).
CH3 Level	Input without XLR adaptor Audio Input Level / CH3 Input Level / **Level+CH3 Input Level** Input with XLR adaptor (page 48) **Audio Input Level** / Through	Sets the combination of audio input level adjustments enabled for recording channel 3.
CH4 Level	Input without XLR adaptor Audio Input Level / CH4 Input Level / **Level+CH4 Input Level** Input with XLR adaptor (page 48) **Audio Input Level** / Through	Sets the combination of audio input level adjustments enabled for recording channel 4.

Audio >Audio Output Sets audio output settings.		
Item	Sub-item setting	Description
Monitor CH	**CH1/CH2** / CH3/CH4 / MIX ALL / CH1 / CH2 / CH3 / CH4	Selects the audio channel output to the headphone jack and built-in speaker. [Note] If audio for multiple channels is set for simultaneous output, the output level for each channel is reduced for output to prevent clipping.
Volume	**0** to 50	Adjusts the monitor audio level output to the headphone jack and built-in speaker.
Headphone Out	Mono / **Stereo**	Selects whether the headphone jack output is monaural (Mono) or stereo (Stereo).
Alarm Level	0 to 7 (**4**)	Adjusts the volume of the alarm.
HDMI Output CH	**CH1/CH2** / CH3/CH4	Sets the combination of audio channels on the HDMI output.

Thumbnail Menu

This section describes the function and settings of each menu item.
Factory default settings are shown in bold (for example, **18dB**).

Thumbnail		
Item	Sub-item setting	Description
Display Clip Properties		Displays the clip properties screen.
Thumbnail >Set Clip Flag Sets clip flag settings.		
Item	Sub-item setting	Description
Add OK		Adds an OK flag.
Add NG		Adds an NG flag.
Add KEEP		Adds a Keep flag.
Delete Clip Flag		Deletes all flags.
Thumbnail >Lock/Unlock Clip Sets clip protection settings.		
Item	Sub-item setting	Description
Select Clip		Selects and locks/unlocks a clip.
Lock All Clips		Locks all clips.
Unlock All Clips		Unlocks all clips.
Thumbnail >Delete Clip Deletes clips.		
Item	Sub-item setting	Description
Select Clip		Deletes the selected clip.
All Clips		Deletes all clips.
Thumbnail >Transfer Clip Transfers clips. [Note] Transfer Clip cannot be configured when a password is not configured using Access Authentication in the Network menu.		
Item	Sub-item setting	Description
Select Clip		Transfers selected clips.
All Clips		Transfers all clips. [Note] Up to 200 clips can be transferred.

Thumbnail >Transfer Clip (Proxy) Transfers proxy clips. [Note] Transfer Clip (Proxy) cannot be configured when a password is not configured using Access Authentication in the Network menu.		
Item	Sub-item setting	Description
Select Clip		Transfers proxy clips corresponding to the selected clips.
All Clips		Transfers proxy clips corresponding to all the clips. [Note] Up to 200 clips can be transferred.
Thumbnail >Filter Clips Sets settings of clips to display.		
Item	Sub-item setting	Description
OK		Display only clips that have an OK flag.
NG		Display only clips that have an NG flag.
KEEP		Display only clips that have a Keep flag.
None		Display only clips that have no flag.
All		Displays all clips, regardless of whether there are any flags.
Thumbnail >Customize View Switches the thumbnail screen view.		
Item	Sub-item setting	Description
Thumbnail Caption	Date Time / **Time Code** / Duration / Sequential Number	Switches the information displayed below thumbnails.

Technical Menu

This section describes the function and settings of each menu item.
Factory default settings are shown in bold (for example, **18dB**).

Technical >Color Bars Sets color bar settings.		
Item	Sub-item setting	Description
Setting	On / **Off**	Turns the color bars on/off.
Type	**ARIB** / 100% / 75% / SMPTE	Selects the color bar type.

Technical >ND Dial Sets settings related to ND VARIABLE dial operations.		
Item	Sub-item setting	Description
CLEAR with Dial	**On** / Off	Sets whether to enable ND status switching (CLEAR ⇔ On) by ND VARIABLE dial operation.

Technical >Tally Sets recording/tally lamp settings.		
Item	Sub-item setting	Description
Front	**On** / Off	Turns the recording/tally lamp (Front) on/off.
Rear	**On** / Off	Turns the recording/tally lamp (Rear) on/off.

Technical >HOLD Switch Setting Sets hold switch settings.		
Item	Sub-item setting	Description
with Rec Button	**On** / Off	Sets whether to lock operation of the record START/STOP button.
with Hand Grip Remote	**On** / Off	Sets whether to lock operation of the grip remote control.
Handle HOLD Switch	**Normal** / Rec Button Only	Sets whether the hold target of the handle HOLD switch is only the handle record START/STOP button. Normal: All operation controls on the handle are targets of the hold operation. However, the handle recording START/STOP button follows the “with Rec Button” setting. Rec Button Only: Only the handle record START/STOP button is the target of the hold operation.

Technical >Touch Operation Sets settings related to touch operations.		
Item	Sub-item setting	Description
Setting	**On** / Off	Turns touch operation on/off.

Technical >Rec Review Sets recording review settings.		
Item	Sub-item setting	Description
Setting	**3 s** / 10 s / Clip	Selects the time for playback of clips just recorded for recording review.

Technical >Zoom Sets the zoom settings.		
Item	Sub-item setting	Description
Zoom Type	**Optical Zoom Only** / On(Clear Image Zoom)	Sets the type of zoom. Optical Zoom Only: Optical zoom is adjusted by operation of the lens. On(Clear Image Zoom): Electronic zoom with little or no deterioration in image quality.

Technical >Handle Zoom Sets handle zoom settings.		
Item	Sub-item setting	Description
Setting	Off / Low / High / **Variable**	Sets the speed of the handle zoom.
High	1 to 8 (**8**)	Sets the zoom speed of the handle zoom lever when High handle zoom speed is selected.
Low	1 to 8 (**3**)	Sets the zoom speed of the handle zoom lever when Low handle zoom speed is selected. [Note] Uneven zooming may occur when the zoom speed is set to a low value.

Technical >Menu Settings Sets settings related to the menu.		
Item	Sub-item setting	Description
User Menu Only	On / **Off**	Sets whether to display the User menu only (On) or display the menu list (Off) when the camcorder displays the menu.
User Menu with Lock	On / **Off**	Sets whether to lock the menu display, showing the User menu only. [Note] In normal menu display operation, this item is not displayed. For details about menu display operation, see page 71.

Technical >Menu Page On/Off Sets settings related to the status screen display.		
Item	Sub-item setting	Description
Main	**On** / Off	Turns the Main Status screen display on/off.
Camera	**On** / Off	Turns the Camera Status screen display on/off.
Audio	**On** / Off	Turns the Audio Status screen display on/off.
Project	**On** / Off	Turns the Project status screen display on/off.
Monitoring	**On** / Off	Turns the Monitoring Status screen display on/off.
Assignable Button	**On** / Off	Turns the Assignable Button Status screen display on/off.

Technical >Menu Page On/Off Sets settings related to the status screen display.		
Item	Sub-item setting	Description
Battery	**On** / Off	Turns the Battery Status screen display on/off.
Media	**On** / Off	Turns the Media Status screen display on/off.
Network	**On** / Off	Turns the Network Status screen display on/off.
File Transfer	**On** / Off	Turns the File Transfer Status screen display on/off.

Technical >Fan Control Sets fan control mode settings.		
Item	Sub-item setting	Description
Setting	**Auto** / Minimum / Off in Rec	Sets the control mode of the camcorder fan. [Note] Even when Off in Rec is selected, the fan will operate if the internal temperature of the camcorder rises above a certain value.

Technical >Lens Sets settings related to lenses.		
Item	Sub-item setting	Description
Zoom Ring Direction	**Left(W)/Right(T)** / Right(W)/Left(T)	Sets the direction of zoom ring operation. [Note] Enabled only when using an E-mount lens that supports zoom ring direction switching.
Shading Compensation	**Auto** / Off	Sets the automatic shading compensation.
Chroma Aberration Comp.	**Auto** / Off	Sets the automatic chromatic aberration compensation.
Distortion Comp.	**Auto** / Off	Sets the automatic distortion compensation.
Breathing Compensation	Auto / **Off**	Sets the lens breathing compensation.
Distance Display	**Meter** / Feet	Sets the display units for lens information and focus position.
Zoom Position Display	Focal Length / **Number** / Bar	Sets the display format for the zoom position.

Technical >Video Light Set Sets the video light lighting method. Available only when using the HVL-LBPC (option).		
Item	Sub-item setting	Description
Video Light Set	**Power Link** / Rec Link / Rec Link + Stby	Sets the lighting control method for the video light attached to the multi-interface shoe. Power Link: Turns the video light on/off when the camcorder is turned on/off. Rec Link: Turns the video light on/off when the camcorder starts/stops recording. Rec Link + Stby: Turns the video light on/standby when the camcorder starts/stops recording.

Technical >APR Executes APR.		
Item	Sub-item setting	Description
APR	Execute / Cancel	Runs APR (Automatic Pixel Restoration) for image sensor auto adjustment. Execute: Execute function. [Note] Always attach the lens cap before running APR.

Technical >Camera Battery Alarm Sets battery low-voltage alarm settings.		
Item	Sub-item setting	Description
Low Battery	5% / **10%** / 15% / ... / 45% / 50%	Sets the remaining battery level to display a battery low-voltage alarm (5% increments).
Battery Empty	**3%** to 7%	Sets the remaining battery level to display a battery empty alarm.

Technical >Camera DC IN Alarm Sets input voltage alarm settings.		
Item	Sub-item setting	Description
DC Low Voltage1	16.0V to 19.0V (**16.5V**)	Sets the voltage to display a DC IN low input voltage alarm.
DC Low Voltage2	**15.5V** to 18.5V	Sets the voltage to display a DC IN insufficient input voltage alarm.

Network Menu

This section describes the function and settings of each menu item.
Factory default settings are shown in bold (for example, **18dB**).

Network >Access Authentication Sets settings related to access authentication.		
Item	Sub-item setting	Description
User Name		Sets the user name for access authentication.
Input Password		Sets the password for access authentication. [Note] From a security standpoint, it is recommended that you set a password with a sufficiently long character string that is hard to guess by others, and that you store it safely.
Generate Password	Execute / Cancel	Automatically generates a password for access authentication. Execute: Execute function.
Show Settings		Displays the user name, password, fingerprint, serial number, product name, and serial number for access authentication as text and QR code. [Note] Take care that the password cannot be viewed and the QR code image cannot be copied by others.

Network >Wireless LAN Sets settings related to wireless LAN connections.		
Item	Sub-item setting	Description
Setting	Access Point Mode / Station Mode / **Off**	Selects the operation mode of the wireless LAN connection.
WPS	Execute / Cancel	Establishes a connection using WPS (Wi-Fi Protected Setup). Execute: Execute function.
NFC	Execute / Cancel	Establishes a connection using NFC (Near Field Communication). Execute: Execute function.
MAC Address		Displays the MAC address of the wireless LAN interface of the camcorder.

Network >AP Mode Settings Sets settings related to access point mode connections.		
Item	Sub-item setting	Description
Channel	Auto(5GHz) / **Auto** / CH1 / CH2 / CH3 / CH4 / CH5 / CH6 / CH7 / CH8 / CH9 / CH10 / CH11	Sets the wireless LAN channel. Auto(5GHz) is available on the ILME-FX6V/VK only.
Camera SSID & Password		Displays the SSID and password of the camcorder.
Regenerate Password	Execute / Cancel	Creates a new password. Execute: Execute function.
IP Address		Displays the IP address of the camcorder in access point mode.
Subnet Mask		Displays the subnet mask of the camcorder in access point mode.

Network >ST Mode Settings
Sets settings related to station mode connections.

Item	Sub-item setting	Description
Camera Remote Control	Enable / **Disable**	Sets whether to enable remote control from a device connected to the camcorder by wireless LAN in station mode.
Connected Network		Displays the connected wireless LAN network (access point).
	SSID	Displays the SSID for the access point to connect.
	Security	Displays the type of security for the access point to connect.
	Password	Displays the password for the access point to connect. When Security is set to WEP or WPA: ******* When Security is set to None: (blank)
	DHCP	Displays whether DHCP is on/off.
	IP Address	Displays the IP address of the camcorder when DHCP is set to Off.
	Subnet Mask	Displays the subnet mask of the camcorder when DHCP is set to Off.
	Gateway	Displays the default gateway of the camcorder when DHCP is set to Off.
	DNS Auto	Displays whether DNS acquisition is on/off.
	Primary DNS Server	Displays the primary DNS server of the camcorder when DNS Auto is set to Off.
	Secondary DNS Server	Displays the secondary DNS server of the camcorder when DNS Auto is set to Off.

Network >ST Mode Settings
Sets settings related to station mode connections.

Item	Sub-item setting	Description
Scan Networks		Detects wireless LAN networks (access points) and displays a list. Select a destination from the list to connect.
	SSID	Displays the SSID for the access point to connect.
	Security	Displays the type of security for the access point to connect.
	Password	Enter the password for the access point to connect.
	DHCP **On** / Off	Turns DHCP on/off.
	IP Address	Enter the IP address of the camcorder when DHCP is set to Off.
	Subnet Mask	Enter the subnet mask of the camcorder when DHCP is set to Off.
	Gateway	Enter the default gateway of the camcorder when DHCP is set to Off.
	DNS Auto **On** / Off	Turns auto DNS acquisition on/off.
	Primary DNS Server	Enter the primary DNS server of the camcorder when DNS Auto is set to Off.
	Secondary DNS Server	Enter the secondary DNS server of the camcorder when DNS Auto is set to Off.

Network >ST Mode Settings
Sets settings related to station mode connections.

Item	Sub-item setting	Description
Manual Register		Registers settings for manual connection to an access point.
	SSID	Enter the SSID for the access point to connect.
	Security None / WEP / **WPA**	Set the type of security for the access point to connect. Select WPA if the type of security of the destination access point is WPA or WPA2.
	Password	Enter the password for the access point to connect.
	DHCP **On** / Off	Turns DHCP on/off.
	IP Address	Enter the IP address of the camcorder when DHCP is set to Off.
	Subnet Mask	Enter the subnet mask of the camcorder when DHCP is set to Off.
	Gateway	Enter the default gateway of the camcorder when DHCP is set to Off.
	DNS Auto **On** / Off	Turns auto DNS acquisition on/off.
	Primary DNS Server	Enter the primary DNS server when DNS Auto is set to Off.
	Secondary DNS Server	Enter the secondary DNS server when DNS Auto is set to Off.

Network >Wired LAN
Sets settings related to wired LAN connections.

Item	Sub-item setting	Description
Setting	On / **Off**	Turns the wired LAN function on/off.
Camera Remote Control	Enable / **Disable**	Sets whether to enable remote control from a device connected to the camcorder by wired LAN.
Detail Settings		Configures properties of the wired LAN connection.
	DHCP **On** / Off	Turns DHCP on/off.
	IP Address	Enter the IP address of the camcorder when DHCP is set to Off.
	Subnet Mask	Enter the subnet mask of the camcorder when DHCP is set to Off.
	Gateway	Enter the default gateway of the camcorder when DHCP is set to Off.
	DNS Auto **On** / Off	Turns auto DNS acquisition on/off.
	Primary DNS Server	Enter the primary DNS server when DNS Auto is set to Off.
	Secondary DNS Server	Enter the secondary DNS server when DNS Auto is set to Off.

Network >Modem
Sets settings related to USB tethering.

Item	Sub-item setting	Description
Setting	On / **Off**	Turns the smartphone connection on/off.
Camera Remote Control	Enable / **Disable**	Sets the permission for remote control via USB tethering using a smartphone application, such as CBM (Content Browser Mobile) or C3 Portal App.
Device Name		Displays the device name of the smartphone.
IP Address		Displays the IP address of the smartphone.
Subnet Mask		Displays the subnet mask of the smartphone.

Network >File Transfer Sets settings related to file transfers.		
Item	Sub-item setting	Description
Auto Upload (Proxy)	On / **Off**	Turns proxy file auto transfer on/off.
Default Upload Server		Selects the upload server for files. The server selected here becomes the auto upload destination for proxy files, and the upload destination for files from the thumbnail screen. Displays the display name configured in Server Settings 1 to 3.
Clear Completed Jobs	Execute / Cancel	Clears completed transfer jobs from the list. Execute: Execute function.
Clear All Jobs	Execute / Cancel	Clears all transfer jobs from the list. Execute: Execute function.
View Job List		Displays the transfer job list.

Network >File Transfer Sets settings related to file transfers.		
Item	Sub-item setting	Description
Server Settings1	Display Name	Sets the display name shown in the transfer destination setup menu.
	Service **FTP**	Displays the type of server.
	Host Name	Sets the host name of the transfer destination server.
	Port (1 to 65535 (**21**))	Sets the port number of the transfer destination server.
	User Name	Sets the user name for authentication of the transfer destination server connection.
	Password	Sets the authentication password of the transfer destination server connection.
	Passive Mode On / **Off**	Turns PASV mode on/off.
	Destination Directory	Enter the name of the transfer destination directory.
	Using Secure Protocol On / **Off**	Sets whether to use (On) or not use (Off) secure FTP transfer (FTPS Explicit Mode: FTPES).
	Root Certificate Load / Clear / **None**	Loads a root certificate for secure FTP transfer and clears settings.
	Root Certificate Status Loaded / **No Certificate**	Displays the root certificate loading status for secure FTP transfer.
	Reset Execute / Cancel	Resets the settings of Server Settings to the defaults. Execute: Execute function.
Server Settings2	Same as Server Settings1.	
Server Settings3	Same as Server Settings1.	

Network >Network Reset Resets the network settings.		
Item	Sub-item setting	Description
Reset	Execute / Cancel	Resets the network settings. Execute: Execute function.

Maintenance Menu

This section describes the function and settings of each menu item.
Factory default settings are shown in bold (for example, **18dB**).

Maintenance >Language Sets the display language.		
Item	Sub-item setting	Description
Select		Sets the display language. SET: Set language.

Maintenance >Clock Set Sets internal clock settings.		
Item	Sub-item setting	Description
Time Zone	UTC – 12:00 to UTC + 14:00	Sets the time difference from UTC in 30-minute units.
Date Mode	**YYMMDD** / MMDDYY / DDMMYY	Selects the display format for dates. YYMMDD: Year, month, day MMDDYY: Month, day, year DDMMYY: Day, month, year
12h/24h	12h / **24h**	Selects the clock display format. 12h: 12-hour mode 24h: 24-hour mode
Date		Sets the current date. SET: Set the value.
Time		Sets the current time. SET: Set the value.

Maintenance >All Reset Resets settings to factory defaults.		
Item	Sub-item setting	Description
Reset	Execute / Cancel	Resets all settings to their factory defaults. Execute: Execute function. [Note] The 3D LUT file imported using Base Look >Import (page 87) in the Paint/Look menu is deleted. To delete all imported 3D LUT files, select Base Look >Delete All in the Paint/Look menu (page 87).
Reset without Network	Execute / Cancel	Resets the menu settings, excluding Network menu settings, to the factory default state.

Maintenance >Hours Meter Displays the accumulated running time.		
Item	Sub-item setting	Description
Hours (System)		Displays the accumulated hours of use (cannot be reset).
Hours(Reset)		Displays the accumulated hours of use (can be reset).
Reset	Execute / Cancel	Resets the Hours(Reset) display to 0. Execute: Execute function.

Maintenance >Version Displays version information.		
Item	Sub-item setting	Description
Version Number	Vx.xx	Displays the software version of the camcorder.
Version Up	Execute / Cancel	Updates the camcorder.* Execute: Execute function. * This function updates the camcorder software.
Lens Version Number	Vxx	Displays the software version number of an E-mount lens.

Shooting Menu Settings and Default Values

ISO/Gain Settings and Default Values

The range of ISO/Gain (page 75) settings and default values vary depending on the Mode, Target Display, Base Look >Select, and Base Sensitivity settings. The available options are highlighted in gray.

When Mode is set to ISO

Target Display	SDR(BT.709)		HDR(HLG)		SDR(BT.709) and HDR(HLG) common	
Base Look >Select	S-Cinetone / Standard / ITU709 / Still		HLG Live / HLG Natural		User1 to User16	
Base Sensitivity	Low	High	Low	High	Low	High
ISO 320	ISO/Gain<L> default					
ISO 400						
ISO 500						
ISO 640	ISO/Gain<M> default					
ISO 800			ISO/Gain<L> default		ISO/Gain<L> default	
ISO 1000						
ISO 1250	ISO/Gain<H> default					
ISO 1600			ISO/Gain<M> default		ISO/Gain<M> default	
ISO 2000						
ISO 2500						
ISO 3200			ISO/Gain<H> default		ISO/Gain<H> default	
ISO 4000						
ISO 5000		ISO/Gain<L> default				
ISO 6400						
ISO 8000						
ISO 10000		ISO/Gain<M> default				
ISO 12800				ISO/Gain<L> default		ISO/Gain<L> default
ISO 16000						
ISO 20000		ISO/Gain<H> default				
ISO 25600				ISO/Gain<M> default		ISO/Gain<M> default
ISO 32000						
ISO 40000						
ISO 51200				ISO/Gain<H> default		ISO/Gain<H> default
ISO 64000						
ISO 80000						
ISO 102400						
ISO 128000						
ISO 160000						
ISO 204800						
ISO 256000						
ISO 320000						
ISO 409600						

When Mode is set to dB

Settings range	
–3dB	
–2dB	
–1dB	
0dB	ISO/Gain<L> default
1dB	
2dB	
3dB	
4dB	
5dB	
6dB	ISO/Gain<M> default
7dB	
8dB	
9dB	
10dB	
11dB	
12dB	ISO/Gain<H> default
13dB	
14dB	
15dB	
16dB	
17dB	
18dB	
19dB	
20dB	
21dB	
22dB	
23dB	
24dB	
25dB	
26dB	
27dB	
28dB	
29dB	
30dB	

AGC Limit Settings and Default Values

The range of AGC Limit (page 77) settings and default values vary depending on the Mode, Target Display, Base Look >Select, and Base Sensitivity settings. The available options are highlighted in gray.

When Mode is set to ISO

Target Display	SDR(BT.709)		HDR(HLG)		HDR(HLG)		SDR(BT.709) and HDR(HLG) common	
Base Look >Select	S-Cinetone / Standard / ITU709 / Still		HLG Live		HLG Natural		User1 to User16	
Base Sensitivity	Low	High	Low	High	Low	High	Low	High
ISO 400								
ISO 500								
ISO 640								
ISO 800								
ISO 1000								
ISO 1250								
ISO 1600								
ISO 2000	Default							
ISO 2500								
ISO 3200								
ISO 4000								
ISO 5000			Default		Default		Default	
ISO 6400								
ISO 8000								
ISO 10000								
ISO 12800								
ISO 16000								
ISO 20000								
ISO 25600								
ISO 32000		Default						
ISO 40000								
ISO 51200								
ISO 64000								
ISO 80000				Default		Default		Default
ISO 102400								
ISO 128000								
ISO 160000								
ISO 204800								
ISO 256000								
ISO 320000								
ISO 409600								

When Mode is set to dB

Settings range	
3dB	
6dB	
9dB	
12dB	
15dB	Default
18dB	
21dB	
24dB	
27dB	
30dB	

Image Quality Settings Saved for Each Shooting Mode

The current status of configuration items related to image quality are saved for each of the following shooting modes (page 24). When you change the shooting mode, the corresponding settings that are saved are applied for the target shooting mode.

- Custom mode SDR(BT.709)
- Custom mode HDR(HLG)
- Cine EI mode

The configuration items related to image quality which are saved for each shooting mode are shown below.
Yes: Item is saved.
No: Item is not saved.

Configuration item			Shooting mode		
			Custom mode		Cine EI mode
			SDR(BT.709)	HDR(HLG)	
Shooting menu	ISO/Gain/EI	ISO/Gain	Yes[1]		No
		Exposure Index	No		Yes
		Base Sensitivity	Yes		No
		Base ISO	No		Yes
	White	Preset White	Yes		Yes
		Other than above	Yes		
	White Setting		Yes		
	Offset White		Yes		No
	LUT On/Off		No		Yes
	Noise Suppression	Setting(Custom)	Yes	Yes	No
		Level(Custom)	Yes	Yes	No
		Setting(Cine EI)	No		Yes
		Level(Cine EI)	No		Yes
Paint/Look Menu	Base Look	Select	Yes	Yes	Yes
		Input[2]	Yes		
		Output[2]	Yes		
		AE Level Offset[2]	Yes		
	Black		Yes	Yes	No
	Knee	Auto Knee	Yes	No	No
		Other than above	Yes	Yes	No
	Detail		Yes	Yes	No
	Matrix		Yes	Yes	No
	Multi Matrix		Yes	Yes	No

1) Separate ISO sensitivity settings are saved for both Custom mode SDR(BT.709) and HDR(HLG).
2) Settings are saved for each Base Look, and do not depend on the shooting mode.

Saving and Loading Configuration Data

Configuration Data

You can save the settings of the full menu to a memory card inserted into CFexpress Type A/SD card slot (B). This allows you to quickly recall an appropriate set of menu settings for the current situation.
Configuration data is saved in the following categories.

User files

User files save the setting items and data of the customizable User menu.
You can save up to 64 files on a memory card. By loading this file into the camcorder memory, you can customize the setup of the User menu.

ALL (all settings) files

ALL files save the configuration data of all menus. You can save up to 64 files on a memory card.

[Note]
Device specific data (shading, output levels, and other data that requires adjustment for the specific device) is not saved.

Saving a User File / ALL File

1 Insert a memory card into CFexpress Type A/SD card slot (B) (page 6).
- For CFexpress cards, the label faces to the left.
- For SD cards, the label faces to the right with the beveled corner at the bottom.

2 For a user file, select User File >Save Media(B) (page 86) >Execute in the Project menu of the full menu.
For an ALL file, select All File >Save Media(B) (page 86) >Execute in the Project menu of the full menu.
A file save destination screen appears.

3 Select a “No File” row on the save destination screen.
Selecting a row with a File ID entry will overwrite the selected file.
The File ID is generated automatically, but you can modify it.

4 Select Execute on the confirmation screen.

Loading a User File / ALL File

1 Insert a memory card on which a file is saved into CFexpress Type A/SD card slot (B) (page 6).
- For CFexpress cards, the label faces to the left.
- For SD cards, the label faces to the right with the beveled corner at the bottom.

2 For a user file, select User File >Load Media(B) (page 86) >Execute in the Project menu of the full menu.
For an ALL file, select All File >Load Media(B) (page 86) >Execute in the Project menu of the full menu.
A file list screen appears.

3 Select a file to load.
A confirmation screen appears.

4 Select Execute.

[Notes]
- The unit will reboot automatically after loading configuration data.
- When All File >Load Network Data in the Project menu of the full menu is set to Off, all settings in the ALL file are loaded except Network menu settings.

Changing the File ID

1 For a user file, select User File >File ID (page 86) in the Project menu of the full menu.
For an ALL file, select All File >File ID (page 86) in the Project menu of the full menu.
A screen for editing the File ID appears.

2 Select a character using the multi selector (page 7) or the multi-function dial (page 5), then press the multi selector apply button or multi-function dial.

3 Repeat step 2 as required.

4 When finished entering characters, select Done.

Connecting External Monitors and Recording Devices

To display recorded/playback pictures on an external monitor, select the camcorder output signal and use an appropriate cable for the monitor to be connected.
You can also connect recording devices, such as a VTR, and record the output signal from the camcorder.
You can display the same information that is visible in the viewfinder, such as status information and menus, on an external monitor. Set Info. Disp. (page 14) on the Monitoring Status screen or Output Display (page 91) in the Monitoring menu of the full menu to On according to the signal to output to the monitor.

SDI OUT Connector (BNC type)

Set the output on/off setting and the output format in the Monitoring menu (page 91).
Use a commercially available 75 Ω coaxial cable for connection.

[Note]
Check that the connection between the camcorder and the external device is grounded before turning the devices on.

(It is recommended that the camcorder and external device be turned on after connecting the 75 Ω coaxial cable.)
If the external device must be connected to the camcorder while the camcorder is on, connect the 75 Ω coaxial cable to the external device first and then connect it to the camcorder.

To start recording on the camcorder and external device simultaneously

With SDI signal output enabled, set SDI/HDMI Rec Control (page 83) >Setting in the Project menu of the full menu to SDI/HDMI Remote I/F or Parallel Rec to enable output of a REC trigger signal to the external device connected to the SDI OUT connector. This will synchronize recording on the external device with the camcorder.

[Notes]
- If a connected external device does not support a REC trigger signal, the device cannot be operated.
- Only the REC trigger signal is output when there is no media currently inserted.

HDMI OUT Connector (Type A connector)

Set the output On/Off setting and the output format in the Monitoring menu (page 91) of the full menu.

To start recording on the camcorder and external device simultaneously

With HDMI signal output enabled, set HDMI TC Out >Setting (page 89) in the TC/Media menu of the full menu to On, and set SDI/HDMI Rec Control >Setting (page 83) in the Project menu to SDI/HDMI Remote I/F or Parallel Rec to enable output of a REC trigger signal to the external device connected to the HDMI OUT connector. This will synchronize recording on the external device with the camcorder.

Synchronizing Timecodes

You can synchronize the timecode of the unit with other devices.

Locking the Timecode to Other Devices

Set the unit that supplies the timecode to a mode in which the timecode output keeps running (such as Free Run or Clock).

1 Set Timecode (page 89) in the TC/Media menu of the full menu as follows.
Mode: Preset
Run: Free Run

2 Press the assignable button (page 49) assigned with the DURATION/TC/U-BIT function to display the timecode on the screen.

3 Check that the TC IN/OUT select switch (page 4) is set to the IN position, then supply a reference timecode for synchronizing the system frequency of the camcorder to the TC IN/TC OUT connector.

The timecode generator of the camcorder acquires lock with the reference timecode, and “EXT-LK” appears on the screen.
Once about ten seconds have elapsed after the timecode locks, the external lock state is maintained even if the external reference timecode source is disconnected.

[Notes]

- When operating with external lock, the timecode instantly acquires lock with the external timecode and the external timecode value appears in the data display area. However, do not start recording immediately. Wait for a few seconds until the timecode generator stabilizes before recording.
- If the frequency of the reference timecode and the frame frequency on the camcorder are not the same, lock cannot be acquired and the camcorder will not operate properly. If this occurs, the timecode will not acquire successful lock with the external timecode.
- The timecode may shift by one frame per hour with respect to the reference timecode.

To release external lock

Change the Timecode setting in the TC/Media menu of the full menu.
External synchronization is also released if the system frequency is changed and when you start recording in a special recording mode (Slow & Quick Motion or Interval Rec).

Synchronizing the Timecode of Another Device with the Timecode of the Camcorder

Set the unit that supplies the timecode to a mode in which the timecode output keeps running (such as Free Run or Clock).

1 Set the timecode of the camcorder using Timecode (page 89) in the TC/Media menu of the full menu.

2 Check that the TC IN/OUT select switch (page 4) is set to the OUT position, and connect the TC IN/TC OUT connector to the timecode input connector of the device you want to synchronize.

Managing/Editing Clips using a Computer

Connecting using a USB Cable

Using a card reader (option)

Connect a CFexpress card reader or SD card reader to a computer using a USB cable, and insert a memory card into the card reader slot. The memory card is recognized as a computer extension drive. On supported computers, you can import clips at high speed using the mass storage mode of the camcorder.

Using mass storage mode

[Note]
Mass storage mode cannot be used when Modem >Setting in the Network menu of the full menu is set to On or when Wired LAN >Setting in the Network menu is set to On. Set both of these to Off.

Connect the camcorder using a USB cable, and insert a memory card in card slot A or B. The memory card is recognized as a computer extension drive.

1 Connect the USB-C connector (page 7) or USB/multi connector (page 7) to the computer using a USB cable.

2 Turn the camcorder POWER switch to the ON position.
A message appears on the viewfinder screen asking whether to enable USB connection.

[Note]
The USB connection confirmation message is not displayed while another confirmation message or progress message is displayed, for example, when formatting or restoring a memory card.
The confirmation message is displayed when the formatting or restoring execution ends. The USB confirmation message is also not displayed when the clip properties screen is displayed. The message is displayed when processing ends or when you return to the thumbnail screen.

3 Turn the multi-function dial to select Execute.

4 On Windows, check that the card is added as a removable disk in the “My Computer” window.
On Mac, check that a folder called “NO NAME” or “Untitled” (editable) is created on the Desktop.

[Notes]
- Do not perform the following operations if the access indicator is lit red.
  - Turning the power off or disconnecting the power cord
  - Removing the memory card
  - Disconnecting the USB cable
- Operation is not guaranteed to work on all computers.

Using a Nonlinear Editing System

In a nonlinear editing system, editing software (option) that supports the formats recorded by the camcorder is required.
Use dedicated application software to save the clips you want to edit on the HDD of the computer beforehand.

Usage Precautions

On condensation

If the unit is suddenly taken from a cold to a warm location, or if ambient temperature suddenly rises, moisture may form on the outer surface of the unit and/or inside of the unit. This is known as condensation. If condensation occurs, turn off the unit and wait until the condensation clears before operating the unit. Operating the unit while condensation is present may damage the unit.

On LCD panels

The LCD panel fitted to this unit is manufactured with high precision technology, giving a functioning pixel ratio of at least 99.99%. Thus a very small proportion of pixels may be “stuck”, either always off (black), always on (red, green, or blue), or flashing. In addition, over a long period of use, because of the physical characteristics of the liquid crystal display, such “stuck” pixels may appear spontaneously. These problems are not a malfunction. Note that any such problems have no effect on recorded data.

Camera CMOS image sensor phenomena

[Note]
The following phenomena that may occur in images are specific to image sensors. They do not indicate a malfunction.

White flecks

Although the image sensors are produced with high-precision technologies, fine white flecks may be generated on the screen in rare cases, caused by cosmic rays, etc.
This is related to the principle of image sensors and is not a malfunction.
The white flecks especially tend to be seen in the following cases:

- When operating at a high environmental temperature
- When you have raised the gain (sensitivity)

Flicker

If shooting under lighting produced by fluorescent lights, sodium lamps, mercury-vapor lamps, or LEDs, the screen may flicker or colors may vary.

On consumable parts

- The fan and battery are consumable parts that will need periodic replacement.
  When operating at room temperature, a normal replacement cycle will be about 5 years. However, this replacement cycle represents only a general guideline and does not imply that the life expectancy of these parts is guaranteed. For details on parts replacement, contact your dealer.
- The life expectancy of the AC adaptor and the electrolytic capacitor is about 5 years under normal operating temperatures and normal usage (8 hours per day; 25 days per month). If usage exceeds the above normal usage frequency, the life expectancy may be reduced correspondingly.
- The battery terminal of this unit (the connector for battery packs and AC adaptors) is a consumable part.
  Power may not be supplied to the unit properly if the pins of the battery terminal are bent or deformed by shock or vibrations, or if they become corroded due to prolonged outdoor use.
  Periodic inspections are recommended to keep the unit working properly and to prolong its usable lifetime. Contact a Sony service or sales representative for more information about inspections.

About the built-in rechargeable battery

The camcorder has a built-in rechargeable battery for storing the date, time, and other settings even when the camcorder is turned off. The built-in rechargeable battery will become charged after 24 hours have elapsed if the unit is connected to a power outlet using the AC adaptor or if a fully charged battery pack is attached, regardless of whether the camcorder is turned on/off. The rechargeable battery will be fully discharged in about 2 months if the AC adaptor is not connected or the camcorder is used without the battery pack attached. Use your camcorder after charging the battery. However, even if the rechargeable battery is not charged, the camcorder operation will not be affected as long as you do not need to record the date.

Usage and storage locations

Store in a level, ventilated place.
Avoid using or storing the unit in the following places.

- In excessive heat or cold (operating temperature range: 0 °C to 40 °C (32 °F to 104 °F))
  Remember that in summer in warm climates the temperature inside a car with the windows closed can easily exceed 50 °C (122 °F).
- In damp or dusty locations. Locations where the unit may be exposed to rain
- Locations subject to violent vibration
- Near strong magnetic fields
- Close to radio or TV transmitters producing strong electromagnetic fields.
- In direct sunlight or close to heaters for extended periods

Note on laser beams

Laser beams may damage the CMOS image sensor. If you shoot a scene that includes a laser beam, be careful not to let the laser beam be directed into the lens of the unit. Specifically, high-power laser beams from medical devices or other devices may cause damage due to reflected light and scattered light.

To prevent electromagnetic interference from portable communications devices

The use of portable telephones and other communications devices near this camera can result in malfunctions and interference with audio and video signals. It is recommended that the portable communications devices near this camera be powered off.

Security precautions

- SONY WILL NOT BE LIABLE FOR DAMAGES OF ANY KIND RESULTING FROM A FAILURE TO IMPLEMENT PROPER SECURITY MEASURES ON TRANSMISSION DEVICES, UNAVOIDABLE DATA LEAKS RESULTING FROM TRANSMISSION SPECIFICATIONS, OR SECURITY PROBLEMS OF ANY KIND.
- Depending on the operating environment, unauthorized third parties on the network may be able to access the unit. When connecting the unit to the network, be sure to confirm that the network is protected securely.
- Communication content may be unknowingly intercepted by unauthorized third parties in the vicinity of the signals. When using wireless LAN communication, implement security measures properly to protect the communication content.
- When connecting this product to a network, connect via a system that provides a protection function, such as a router or firewall. If connected without such protection, security issues may occur.

Output Formats and Limitations

Factory default settings are shown in bold (for example, **1920×1080P (Level A)**).

[Notes]

- The resolution of the output format is limited by the Rec Format >Frequency, Codec and Video Format settings in the Project menu of the full menu (page 80).
- The resolution of the output format is also limited by the combination with the S&Q frame rate. In addition to the table of SDI OUT/HDMI OUT connector output formats below, the HDMI output changes to Full HD or lower when all the following conditions are met.
  - S&Q Motion >Setting in the Shooting menu is set to On
  - S&Q Motion >Frame Rate in the Shooting menu is higher than 60fps
  - Rec Format >Codec in the Project menu is set to RAW or RAW & XAVC-I, or Output On/Off >SDI in the Monitoring menu is set to On
- When the conditions above are met, the HDMI output 4096×2160P and 3840×2160P selection options for Output Format >SDI/HDMI (page 91) in the Monitoring menu are grayed out and cannot be selected.
- The image is not output if a higher resolution than the playback image resolution is configured.

SDI OUT/HDMI OUT Connector Output Formats

System frequency setting (Rec Format >Frequency in the Project menu)	Codec setting (Rec Format >Codec in the Project menu)	RAW/Recording format setting (Rec Format >RAW Output Format/Video Format in the Project menu)	Output format (Output Format in the Monitoring menu)	
			SDI	HDMI
50/59.94Hz	RAW RAW & XAVC-I	4096×2160(RAW)	(4096×2160 RAW)	4096×2160P
				3840×2160P
				1920×1080P
				1920×1080i
		3840×2160(RAW)	(3840×2160 RAW)	3840×2160P
				1920×1080P
				1920×1080i
	RAW(HDMI) RAW(HDMI) & XAVC-I	4240×2392(RAW)	**1920×1080P (Level A)**	(4240×2392 HDMI RAW)
			1920×1080P (Level B)	
			1920×1080i	

System frequency setting (Rec Format >Frequency in the Project menu)	Codec setting (Rec Format >Codec in the Project menu)	RAW/Recording format setting (Rec Format >RAW Output Format/Video Format in the Project menu)	Output format (Output Format in the Monitoring menu)	
			SDI	HDMI
50/59.94Hz	XAVC-I XAVC-L	4096×2160(Video)	4096×2160P[1)]	4096×2160P
			4096×2160P	1920×1080P
			4096×2160P	1920×1080i
			3840×2160P	3840×2160P
			3840×2160P	1920×1080P
			3840×2160P	1920×1080i
			1920×1080P (Level A)	**1920×1080P**
			1920×1080P (Level A)	1920×1080i
			1920×1080P (Level B)	1920×1080P
			1920×1080P (Level B)	1920×1080i
			1920×1080i	1920×1080i
		3840×2160(Video)	3840×2160P	3840×2160P
			3840×2160P	1920×1080P
			3840×2160P	1920×1080i
			1920×1080P (Level A)	**1920×1080P**
			1920×1080P (Level A)	1920×1080i
			1920×1080P (Level B)	1920×1080P
			1920×1080P (Level B)	1920×1080i
			1920×1080i	1920×1080i

System frequency setting (Rec Format >Frequency in the Project menu)	Codec setting (Rec Format >Codec in the Project menu)	RAW/Recording format setting (Rec Format >RAW Output Format/Video Format in the Project menu)	Output format (Output Format in the Monitoring menu)	
			SDI	HDMI
50/59.94Hz	XAVC-I XAVC-L	1920×1080(Video)	**1920×1080P (Level A)**	**1920×1080P**
			1920×1080P (Level A)	1920×1080i
			1920×1080P (Level B)	1920×1080P
			1920×1080P (Level B)	1920×1080i
			1920×1080i	1920×1080i
			(Output stopped)	720×480P[1) 2)]
				720×576P[1) 3)]
25/29.97Hz	RAW RAW & XAVC-I	4096×2160(RAW)	(4096×2160 RAW)	4096×2160P
				3840×2160P
				1920×1080P
				1920×1080i
		3840×2160(RAW)	(3840×2160 RAW)	3840×2160P
				1920×1080P
				1920×1080i
	RAW(HDMI) RAW(HDMI) & XAVC-I	4240×2392(RAW)	1920×1080P	(4240×2392 HDMI RAW)
			1920×1080PsF	
	XAVC-I XAVC-L	4096×2160(Video)	4096×2160P[1)]	4096×2160P
			4096×2160P	1920×1080P
			3840×2160P	3840×2160P
			3840×2160P	1920×1080P
			1920×1080P	1920×1080P
			1920×1080PsF	**1920×1080i**
		3840×2160(Video)	3840×2160P	3840×2160P
			3840×2160P	1920×1080P
			1920×1080P	1920×1080P
			1920×1080PsF	**1920×1080i**
		1920×1080(Video)	1920×1080P	1920×1080P
			1920×1080PsF	**1920×1080i**

System frequency setting (Rec Format >Frequency in the Project menu)	Codec setting (Rec Format >Codec in the Project menu)	RAW/Recording format setting (Rec Format >RAW Output Format/Video Format in the Project menu)	Output format (Output Format in the Monitoring menu)	
			SDI	HDMI
23.98Hz	RAW RAW & XAVC-I	4096×2160(RAW)	(4096×2160 RAW)	4096×2160P
				3840×2160P
				1920×1080P
		3840×2160(RAW)	(3840×2160 RAW)	3840×2160P
				1920×1080P
	RAW(HDMI) RAW(HDMI) & XAVC-I	4240×2392(RAW)	**1920×1080P**	(4240×2392 HDMI RAW)
	XAVC-I XAVC-L	4096×2160(Video)	4096×2160P[1)]	4096×2160P
			4096×2160P	1920×1080P
			3840×2160P	3840×2160P
			3840×2160P	1920×1080P
			1920×1080P	**1920×1080P**
		3840×2160(Video)	3840×2160P	3840×2160P
			3840×2160P	1920×1080P
			1920×1080P	**1920×1080P**
		1920×1080(Video)	**1920×1080P**	**1920×1080P**
24Hz	RAW RAW & XAVC-I	4096×2160(RAW)	(4096×2160 RAW)	4096×2160P
				1920×1080P
	XAVC-I	4096×2160(Video)	4096×2160P[1)]	4096×2160P
			1920×1080P	**1920×1080P**

1) The screen display cannot be embedded.
2) When the system frequency is 59.94
3) When the system frequency is 50

Troubleshooting

Power Supply

Symptom	Cause	Solution
The camcorder does not power on.	No battery pack is mounted and no power is supplied to the DC IN connector.	Mount a battery pack (page 17) or connect to AC power using an AC adaptor (page 18).
	The battery pack is completely exhausted.	Replace the battery pack with a fully charged one (page 17).
The power supply cuts while operating.	The battery pack becomes exhausted.	Replace the battery pack with a fully charged one (page 17).
The battery pack becomes exhausted very quickly.	The ambient temperature is very low.	This is due to the battery characteristics and is not a defect.
	The battery pack is inadequately charged.	Recharge the battery pack (page 17). If the battery pack is soon exhausted even after you charged it fully, it may comes to the end of its life. Replace it with a new one.

Recording/Playback

Symptom	Cause	Solution
Recording does not start when you press the record START/STOP button.	The memory card is full.	Replace the memory card with one having sufficient space.
	The memory card needs restoration.	Restore the memory card (page 33).
Audio recording is not possible.	The AUDIO LEVEL (CH1/CH2) dials are set to the minimum level.	Adjust the audio recording levels with the AUDIO LEVEL (CH1/CH2) dials (page 47).
The recorded sound is distorted.	The audio level is too high.	Adjust the audio recording levels with the AUDIO LEVEL (CH1/CH2) dials (page 47).
The recorded sound has a high noise level.	The audio level is too low.	Adjust the audio recording levels with the AUDIO LEVEL (CH1/CH2) dials (page 47). When an external microphone is selected, also adjust the INPUT MIC Reference setting under Audio Input in the Audio menu (page 94).
Clips cannot be played back.	The clip is being edited.	Clips cannot be played back if you have modified file names or folders, or if the clip is in use on a computer. This is not a malfunction.
	The clip is being recorded on another device.	Clips recorded on other devices may not be played back, or displayed in incorrect size. This is not a malfunction.

External Devices

Symptom	Solution
The computer does not recognize the camcorder.	Disconnect the USB cable from the computer, then connect it again securely.
	Disconnect the USB cable from your computer, reboot your computer, and follow the steps again in the correct order.
	Connect the computer and the camcorder by inserting a USB cable into either the USB-C connector or the USB/multi connector.
Clips cannot be loaded on the computer.	Disconnect the USB cable from the computer, restart the camcorder, and then connect it again.
	Application software must be installed to load clips on your computer (page 113).

Wireless LAN Connection

[Note]
Obstructions and electromagnetic interference between the camcorder and wireless LAN access point or terminal device, or the ambient environment (such as wall materials) could shorten the communication range or prevent connections altogether. If you experience these problems, check the connection/communication status after moving the camcorder to a new location, or bringing the camcorder and access point/terminal device closer together.

Symptom	Solution
A terminal device cannot access the camcorder.	• Check the wireless LAN connection (IP address, etc.). • The communication setting between the access point and client may be invalid. For details, refer to the operating instructions of the access point.
You cannot log in to the camcorder.	Check the user name and password that you set.

Internet Connection

Symptom	Solution
File uploading fails.	The user name and password of the server may not be correct. Input the correct user name and password.
File uploading is not available.	Signal condition may be poor. Move to another location and try again.

When using the ND Filter

Symptom	Solution
The ND filter does not move.	You can move the filter to the Clear position manually using the following procedure.

1 Turn the camcorder POWER switch to the off position.

2 Remove the round cap on the bottom side.

3 Insert a screwdriver in the hole and turn it counterclockwise.
- The ND filter moves to the Clear position by turning counterclockwise. Continue turning until reaching the Clear position.
- Use a screwdriver with ø2.4 mm diameter or smaller. The insertion depth of the screwdriver is about 3.0 cm ($1\,^{3}/_{16}$ in.).

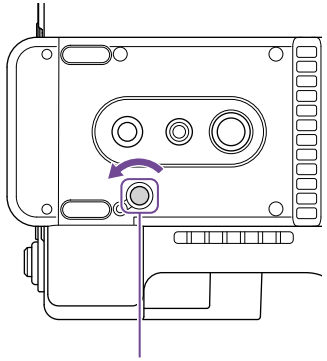

Screwdriver hole
(with cap removed)

4 Set the ND PRESET/VARIABLE switch (page 5) to the PRESET position, and set the ND FILTER POSITION up/down buttons (page 5) to the CLEAR position.

[Notes]
- Do not use the procedure above during normal operation. Only use this procedure if the ND filter will not move. The ND filter may become damaged if this procedure is used during normal operation.
- After the procedure above is used, consult a Sony service center to have the camcorder repaired.
- If an error message still appears after performing the procedure above, shooting is still possible.

Error/Warning Messages

If a warning, caution, or operating condition that requires confirmation occurs on the camcorder, a message is displayed in the viewfinder, the recording/tally lamp starts flashing, and a warning sound is emitted.
The warning sound is emitted from the headphones connected to the headphone connector.

Error Messages

The camcorder will stop operation when the following kind of display occurs.

Viewfinder message	Warning sound	Recording/ tally lamp	Cause and Solution
E + error code	Continuous	High-speed flashing	Indicates an abnormality in the camcorder. Recording stops, even if ●REC is displayed in the viewfinder. Turn off the camcorder, and check for any problem with connected devices, cables, or media. If the error persists when the camcorder is turned on again, contact your Sony service representative. (If the camcorder does not turn off when the POWER switch is set to OFF, remove the battery or disconnect the DC IN supply.) An error display or warning sound may not occur depending on the status of the camcorder.

Warning Messages

Follow the instructions provided if the following display occurs.

Viewfinder message	Warning sound	Recording/ tally lamp	Cause and Solution
Battery Near End	Intermittent	Flashing	The remaining capacity of the battery pack is getting low. Recharge at the earliest convenience.
Battery End	Continuous	High-speed flashing	The battery pack is empty. Recording is disabled. Stop operation and replace the battery pack.
Temperature High	Intermittent	Flashing	The internal temperature is high. Turn off the camcorder and allow it to cool down before operating it again.
Media Temperature High	Intermittent	Flashing	The temperature of the CFexpress card is high. Replace the card or allow it to cool down before using it again.
Voltage Low	Intermittent	Flashing	The DC IN voltage is low (level 1). Check the power source.
Insufficient Voltage	Continuous	High-speed flashing	The DC IN voltage is too low (level 2). Recording is disabled. Connect a different power source.
Media Near Full	Intermittent	Flashing	The remaining capacity on the memory card is getting low. Replace at the earliest convenience.
Media Full	Continuous	High-speed flashing	Clips could not be recorded or copied because there is no remaining capacity on the memory card. Replace immediately.
Clips Near Full	Intermittent	Flashing	The number of additional clips that can be recorded on a memory card is getting low. Replace at the earliest convenience.
Clips Full	Continuous	High-speed flashing	The maximum number of clips that can be recorded on the memory card has been reached. Recording or copying more clips is not possible. Replace immediately.
Last Clip Recording	Intermittent	Flashing	The clip currently recording is the last clip that can be recorded, as the maximum number of clips has been reached. Prepare a new memory card.
Media(A)[1] Life Near End	Intermittent	Flashing	The memory card is approaching the end of its life. Replace at the earliest convenience.
Media(A)[1] Life End	Continuous	High-speed flashing	The memory card has reached the end of its life. Replace immediately.
Media(A)[1] Near Full	Intermittent	Flashing	When using the Simul Rec function
Media(A)[1] Full	Continuous	High-speed flashing	When using the Simul Rec function
Media(A)[1] Clips Near Full	Intermittent	Flashing	When using the Simul Rec function
Media(A)[1] Clips Full	Continuous	High-speed flashing	When using the Simul Rec function
Media(A)[1] Last Clip Rec	Intermittent	Flashing	When using the Simul Rec function

1) "(B)" is displayed for the card in slot B.

Caution and Operation Messages

The following caution and operation messages may appear in the center of the screen. Follow the instructions provided to resolve the issue.

Display message	Cause and Solution
Battery Error Please Change Battery	An error was detected in the battery pack. Replace with a normal battery pack.
Backup Battery End Please Change	The remaining capacity of the backup battery is insufficient. Charge the backup battery.
Unknown Media (A) [1] Please Change	A memory card that has been partitioned or a memory card containing more clips that can be handled by the camcorder was inserted. The card cannot be used in the camcorder, and must be replaced.
Cannot Use Media (A) [1] Unsupported File System	A card using a different file system or an unformatted card was inserted. The card cannot be used in the camcorder, and must be replaced or formatted using the camcorder.
Media Error Media (A) [1] Needs to be Restored	An error occurred on the memory card, and the card must be restored. Restore the memory card.
Media Error Cannot Record to Media (A) [1]	The memory card may be damaged, and can no longer be used for recording. Playback is possible, so making a copy and replacing the memory card is recommended.
Media Error Cannot Use Media (A) [1]	The memory card may be damaged, and can no longer be used for recording or playback. The card cannot be used in the camcorder, and must be replaced.
Media (A) [1] Error Recording Halted Playback Halted	Recording and playback was stopped because an error occurred while using the memory card. If the problem persists, replace the memory card.
Media Reached Rewriting Limit Change Media (A) [1]	The memory card has reached the end of its life. Make a backup, and replace the card immediately. If you continue using the card, the card may not be able to record or play. For details, refer to the operating instructions for the memory card.
The specified address is invalid.	The specified address is invalid. Check that the setting is correct.
Cannot Use Specified Port Number	The specified port number is invalid. Check that the setting is correct.
Fan Stopped	The built-in fan stopped. Avoid use at high temperatures, disconnect the power, and contact your Sony service representative.
Lens I/F Error(xx:xx)	A lens error was detected in the lens I/F communication when an E-mount lens was attached. Check the status of the connection with the E-mount lens. If the problem persists, contact your Sony service representative with the error code (five characters in parentheses).
This Multi Term. acc is not supported by the device and cannot be used. Please verify the compatibility.	An incompatible accessory was detected. The only Multi Terminal accessory supported by the unit is the supplied grip remote control.
Failed	This error may appear if an address cannot be obtained with DHCP set to On. Check the DHCP server settings.
Cannot add auto upload job of Proxy file because maximum number of upload jobs was reached.	The maximum number of transfer jobs has been reached. Clear any unwanted jobs. The auto upload destination setting for proxy files may also be incorrect. Check that the setting is correct.
<SSID>Not found.	Network (access point) with the specified <SSID> could not be found. Check that the setting is correct.
<SSID>Authentication Failed	Connection authentication on the network (access point) with the specified <SSID> failed. Check that the password and other settings are correct.
An IP address conflict has occurred. Please check the network settings.	There is a conflict in the network addresses of the wireless LAN, wired LAN, or USB tethering. Change the address manually or change the settings for the network router.
The IP address of the Wireless LAN Access Point Mode has been changed due to an IP address conflict.	The IP address of the wireless LAN access point mode was changed due to a conflict in the network addresses of the wireless LAN access point mode, wired LAN, or USB tethering. Check the IP address setting.

1) "(B)" is displayed for the card in slot B.

Items Saved in Files

Items Configured in the Full Menu

Yes: Item is saved.
No: Item is not saved.
–: Not saved (temporary setting)

LEVEL 1	LEVEL 2	LEVEL 3	All File	Scene File
Shooting	ISO/Gain/EI	Mode	Yes	No
		ISO/Gain<H>	Yes	No
		ISO/Gain<M>	Yes	No
		ISO/Gain<L>	Yes	No
		Exposure Index<H>	Yes	No
		Exposure Index<M>	Yes	No
		Exposure Index<L>	Yes	No
		Shockless Gain	Yes	No
		Base Sensitivity	Yes	No
		Base ISO	Yes	No
	ND Filter	Preset1	Yes	No
		Preset2	Yes	No
		Preset3	Yes	No
	Shutter	Mode	Yes	No
		Shutter Speed On/Off	Yes	No
		Shutter Speed	Yes	No
		Shutter Angle	Yes	No
		ECS On/Off	Yes	No
		ECS Frequency	Yes	No
	Iris	Bokeh Control	No	No
Shooting	Auto Exposure	Level	Yes	No
		Mode	Yes	No
		Speed	Yes	No
		AGC	Yes	No
		AGC Limit	Yes	No
		AGC Point	Yes	No
		Auto Shutter	Yes	No
		A.SHT Limit	Yes	No
		A.SHT Point	Yes	No
		Clip High light	Yes	No
		Detect Window	Yes	No
		Detect Window Indication	Yes	No
		Custom Width	Yes	No
		Custom Height	Yes	No
		Custom H Position	Yes	No
		Custom V Position	Yes	No
	White	Preset White	Yes	No
		Color Temp <A>	Yes	No
		Tint<A>	Yes	No
		R Gain <A>	Yes	No
		B Gain <A>	Yes	No
		Color Temp <B>	Yes	No
		Tint<B>	Yes	No
		R Gain <B>	Yes	No
		B Gain <B>	Yes	No
	White Setting	Shockless White	Yes	No
		ATW Speed	Yes	No
		White Switch<B>	Yes	No
		Filter White Memory	Yes	No

LEVEL 1	LEVEL 2	LEVEL 3	All File	Scene File
Shooting	Offset White	Offset White <A>	Yes	No
		Offset Color Temp<A>	Yes	No
		Offset Tint<A>	Yes	No
		Offset White <B>	Yes	No
		Offset Color Temp<B>	Yes	No
		Offset Tint<B>	Yes	No
		Offset White<ATW>	Yes	No
		Offset Color Temp<ATW>	Yes	No
		Offset Tint<ATW>	Yes	No
	Focus	AF Transition Speed	Yes	No
		AF Subj. Shift Sens.	Yes	No
		Focus Area	Yes	No
		Focus Area (AF-S)	Yes	No
		Face/Eye Detection AF	Yes	No
		Push AF Mode	Yes	No
		Touch Function in MF	Yes	No
		AF Assist	Yes	No
	S&Q Motion	Setting	Yes	No
		Frame Rate	Yes	No
	LUT On/Off	SDI/HDMI	Yes	No
		VF/Proxy/Stream	Yes	No
		Internal Rec	Yes	No
	Noise Suppression	Setting(Custom)	Yes	No
		Level(Custom)	Yes	No
		Setting(Cine EI)	Yes	–
		Level(Cine EI)	Yes	–
	Flicker Reduce	Mode	Yes	No
		Frequency	Yes	No
	SteadyShot	Setting	Yes	No

LEVEL 1	LEVEL 2	LEVEL 3	All File	Scene File
Project	Base Setting	Shooting Mode	Yes	–
		Target Display	Yes	–
	Rec Format	Frequency	Yes	No
		Imager Scan Mode	Yes	No
		Codec	Yes	No
		RAW Output Format	Yes	No
		Video Format	Yes	No
	Cine EI Setting	Color Gamut	Yes	–
	HDR Setting	VF SDR Preview	Yes	No
		SDR Gain	Yes	No
	Simul Rec	Setting	Yes	No
		Rec Button Set	Yes	No
	Proxy Rec	Setting	Yes	No
		Audio Channel	Yes	No
	Interval Rec	Setting	No	No
		Interval Time	Yes	No
		Number of Frames	Yes	No
		Pre-Lighting	Yes	No
	Picture Cache Rec	Setting	Yes	No
		Cache Size	Yes	No
		Cache Rec Time	–	–
	SDI/HDMI Rec Control	Setting	Yes	No
	Assignable Button	<1>	Yes	No
		<2>	Yes	No
		<3>	Yes	No
		<4>	Yes	No
		<5>	Yes	No
		<6>	Yes	No
		<7>	Yes	No
		<8>	Yes	No
		<9>	Yes	No
		Focus Hold Button	Yes	No

LEVEL 1	LEVEL 2	LEVEL 3	All File	Scene File
Project	Assignable Dial	Grip/Remote Dial	Yes	No
		Grip Dial Direction	Yes	No
		Handle Dial	Yes	No
		Handle Dial Direction	Yes	No
	Multi Function Dial	Default Function	Yes	No
	User File	Load Media(B)	–	–
		Save Media(B)	–	–
		File ID	No	No
		Load Customize Data	Yes	No
		Load White Data	Yes	No
	All File	Load Media(B)	–	–
		Save Media(B)	–	–
		File ID	Yes	No
		Load Network Data	No	No
Paint/Look	Scene File	Recall	–	–
		Store	–	–
		Delete	–	–
		Preset Recall	–	–
	Base Look	Select	Yes	Yes
		Delete	–	–
		Delete All	–	–
		Import	–	–
		Input	Yes	Yes
		Output	Yes	Yes
		AE Level Offset	Yes	Yes
	Reset Paint Settings	Reset without Base Look	–	–
	Black	Master Black	Yes	Yes
		R Black	Yes	Yes
		B Black	Yes	Yes
	Knee	Setting	Yes	Yes
		Auto Knee	Yes	Yes
		Point	Yes	Yes
		Slope	Yes	Yes

LEVEL 1	LEVEL 2	LEVEL 3	All File	Scene File
Paint/Look	Detail	Setting	Yes	Yes
		Level	Yes	Yes
		Manual Setting	Yes	Yes
		V/H Balance	Yes	Yes
		B/W Balance	Yes	Yes
		Limit	Yes	Yes
		Crispening	Yes	Yes
		High Light Detail	Yes	Yes
	Matrix	User Matrix	Yes	Yes
		User Matrix Level	Yes	Yes
		User Matrix Phase	Yes	Yes
		User Matrix R-G	Yes	Yes
		User Matrix R-B	Yes	Yes
		User Matrix G-R	Yes	Yes
		User Matrix G-B	Yes	Yes
		User Matrix B-R	Yes	Yes
		User Matrix B-G	Yes	Yes
	Multi Matrix	Setting	Yes	Yes
		Reset	–	–
		Axis	No	Yes
		Hue	Yes	Yes
		Saturation	Yes	Yes
TC/Media	Timecode	Mode	Yes	No
		Run	Yes	No
		Setting	No	No
		Reset	–	–
		TC Format	Yes	No
	TC Display	Display Select	Yes	No
	Users Bit	Mode	Yes	No
		Setting	No	No
	HDMI TC Out	Setting	Yes	No
	Clip Name Format	Title Prefix	Yes	No
		Number Set	No	No
	Update Media	Media(A)	–	–
		Media(B)	–	–
	Format Media	Media(A)	–	–
		Media(B)	–	–

LEVEL 1	LEVEL 2	LEVEL 3	All File	Scene File
Monitoring	Output On/Off	SDI	Yes	No
		HDMI	Yes	No
	Output Format	SDI	Yes	No
		HDMI	Yes	No
	Output Display	SDI	Yes	No
		HDMI	Yes	No
	Display On/Off	Network Status	Yes	No
		File Transfer Status	Yes	No
		Rec/Play Status	Yes	No
		RAW Output Control Status	Yes	No
		Tally	Yes	No
		Battery Remain	Yes	No
		Focus Mode	Yes	No
		Focus Position	Yes	No
		Focus Area Indicator	Yes	No
		Focus Area Ind.(AF-S)	Yes	No
		Face/Eye Detection Frame	Yes	No
		Lens Info	Yes	No
		Imager Scan Mode	Yes	No
		Rec Format	Yes	No
		Frame Rate	Yes	No
		Zoom Position	Yes	No
		UWP RF Level	Yes	No
		SteadyShot	Yes	No
		Base Look/LUT	Yes	No
		SDI/HDMI Rec Control	Yes	No
		Gamma Display Assist	Yes	No
		Proxy Status	Yes	No
		Base ISO/Sensitivity	Yes	No
		Media Status	Yes	No
		Video Signal Monitor	Yes	No
		Clip Name	Yes	No
		White Balance	Yes	No
		Scene File	Yes	No
		Focus Indicator	Yes	No
		Auto Exposure Mode	Yes	No
		Auto Exposure Level	Yes	No
		Timecode	Yes	No
		ND Filter	Yes	No
		Iris	Yes	No
		ISO/Gain/EI	Yes	No
		Shutter	Yes	No
		Level Gauge	Yes	No
		Audio Level Meter	Yes	No
		Video Level Warning	Yes	No
		Clip Number	Yes	No
		Notice Message	Yes	No
	Marker	Setting	Yes	No
		Color	Yes	No
		Center Marker	Yes	No
		Safety Zone	Yes	No
		Safety Area	Yes	No
		Aspect Marker	Yes	No
		Aspect Mask	Yes	No
		Aspect Safety Zone	Yes	No
		Aspect Safety Area	Yes	No
		Aspect Select	Yes	No
		Custom Aspect Ratio	Yes	No
		Guide Frame	Yes	No
		100% Marker	Yes	No
		User Box	Yes	No
		User Box Width	Yes	No
		User Box Height	Yes	No
		User Box H Position	Yes	No
		User Box V Position	Yes	No
	VF Setting	Brightness	Yes	No
		Color Mode	Yes	No
	Gamma Display Assist	Setting	Yes	No
	Peaking	Setting	Yes	No
		Peaking Level	Yes	No
		Color	Yes	No
	Zebra	Setting	Yes	No
		Zebra1 Level	Yes	No
		Zebra1 Aperture Level	Yes	No
		Zebra2 Level	Yes	No

LEVEL 1	LEVEL 2	LEVEL 3	All File	Scene File
Audio	Audio Input	CH1 Input Select	Yes	No
		CH2 Input Select	Yes	No
		CH3 Input Select	Yes	No
		CH4 Input Select	Yes	No
		INPUT1 MIC Reference	Yes	No
		INPUT2 MIC Reference	Yes	No
		Line Input Reference	Yes	No
		Reference Level	Yes	No
		CH1 Wind Filter	Yes	No
		CH2 Wind Filter	Yes	No
		CH3 Wind Filter	Yes	No
		CH4 Wind Filter	Yes	No
		CH3 Level Control	Yes	No
		CH4 Level Control	Yes	No
		CH3 Input Level	Yes	No
		CH4 Input Level	Yes	No
		Audio Input Level	Yes	No
		Limiter Mode	Yes	No
		CH1&2 AGC Mode	Yes	No
		CH3&4 AGC Mode	Yes	No
		AGC Spec	Yes	No
		1kHz Tone on Color Bars	Yes	No
		CH1 Level	Yes	No
		CH2 Level	Yes	No
		CH3 Level	Yes	No
		CH4 Level	Yes	No
	Audio Output	Monitor CH	Yes	No
		Volume	No	No
		Headphone Out	Yes	No
		Alarm Level	Yes	No
		HDMI Output CH	Yes	No

LEVEL 1	LEVEL 2	LEVEL 3	All File	Scene File
Thumbnail	Display Clip Properties		–	–
	Set Clip Flag	Add OK	–	–
		Add NG	–	–
		Add KEEP	–	–
		Delete Clip Flag	–	–
	Lock/Unlock Clip	Select Clip	–	–
		Lock All Clips	–	–
		Unlock All Clips	–	–
	Delete Clip	Select Clip	–	–
		All Clips	–	–
	Transfer Clip	Select Clip	–	–
		All Clips	–	–
	Transfer Clip (Proxy)	Select Clip	–	–
		All Clips	–	–
	Filter Clips	OK	–	–
		NG	–	–
		KEEP	–	–
		None	–	–
		All	–	–
	Customize View	Thumbnail Caption	Yes	–
Technical	Color Bars	Setting	No	No
		Type	Yes	No
	ND Dial	CLEAR with Dial	Yes	No
	Tally	Front	Yes	No
		Rear	Yes	No
	HOLD Switch Setting	with Rec Button	Yes	No
		with Hand Grip Remote	Yes	No
		Handle HOLD Switch	Yes	No
	Touch Operation	Setting	Yes	No
	Rec Review	Setting	Yes	No
	Zoom	Zoom Type	Yes	No
	Handle Zoom	Setting	Yes	No
		High	Yes	No
		Low	Yes	No
	Menu Settings	User Menu Only	Yes	No
		User Menu with Lock	No	No

LEVEL 1	LEVEL 2	LEVEL 3	All File	Scene File
Technical	Menu Page On/Off	Main	Yes	No
		Camera	Yes	No
		Audio	Yes	No
		Project	Yes	No
		Monitoring	Yes	No
		Assignable Button	Yes	No
		Battery	Yes	No
		Media	Yes	No
		Network	Yes	No
		File Transfer	Yes	No
	Fan Control	Setting	Yes	No
	Lens	Zoom Ring Direction	Yes	No
		Shading Compensation	Yes	No
		Chroma Aberration Comp.	Yes	No
		Distortion Comp.	Yes	No
		Breathing Compensation	Yes	No
		Distance Display	Yes	No
		Zoom Position Display	Yes	No
	Video Light Set	Video Light Set	Yes	No
	APR	APR	–	–
	Camera Battery Alarm	Low Battery	Yes	No
		Battery Empty	Yes	No
	Camera DC IN Alarm	DC Low Voltage1	Yes	No
		DC Low Voltage2	Yes	No
Network	Access Authentication	User Name	No	No
		Input Password	No	No
		Generate Password	–	–
		Show Settings	–	–
	Wireless LAN	Setting	Yes	No
		WPS	–	–
		NFC	–	–
		MAC Address	–	–
	AP Mode Settings	Channel	Yes	No
		Camera SSID & Password	–	–
		Regenerate Password	–	–
		IP Address	–	–
		Subnet Mask	–	–

LEVEL 1	LEVEL 2	LEVEL 3	All File	Scene File
Network	ST Mode Settings	Camera Remote Control	Yes	No
		Connected Network		
		SSID	–	–
		Security	–	–
		Password	–	–
		DHCP	–	–
		IP Address	–	–
		Subnet Mask	–	–
		Gateway	–	–
		DNS Auto	–	–
		Primary DNS Server	–	–
		Secondary DNS Server	–	–
		Scan Networks		
		SSID	–	–
		Security	–	–
		Password	No	No
		DHCP	Yes	No
		IP Address	Yes	No
		Subnet Mask	Yes	No
		Gateway	Yes	No
		DNS Auto	Yes	No
		Primary DNS Server	Yes	No
		Secondary DNS Server	Yes	No
		Manual Register		
		SSID	Yes	No
		Security	Yes	No
		Password	No	No
		DHCP	Yes	No
		IP Address	Yes	No
		Subnet Mask	Yes	No
		Gateway	Yes	No
		DNS Auto	Yes	No
		Primary DNS Server	Yes	No
		Secondary DNS Server	Yes	No

LEVEL 1	LEVEL 2	LEVEL 3	All File	Scene File
Network	Wired LAN	Setting	Yes	No
		Camera Remote Control	Yes	No
		Detail Settings		
		DHCP	Yes	No
		IP Address	Yes	No
		Subnet Mask	Yes	No
		Gateway	Yes	No
		DNS Auto	Yes	No
		Primary DNS Server	Yes	No
		Secondary DNS Server	Yes	No
	Modem	Setting	Yes	No
		Camera Remote Control	Yes	No
		Device Name	–	–
		IP Address	–	–
		Subnet Mask	–	–
	File Transfer	Auto Upload (Proxy)	Yes	No
		Default Upload Server	Yes	No
		Clear Completed Jobs	–	–
		Clear All Jobs	–	–
		View Job List	–	–
		Server Settings1/Server Settings2/Server Settings3		
		Display Name	Yes	No
		Service	Yes	No
		Host Name	Yes	No
		Port	Yes	No
		User Name	No	No
		Password	No	No
		Passive Mode	Yes	No
		Destination Directory	Yes	No
		Using Secure Protocol	Yes	No
		Root Certificate	–	–
		Root Certificate Status	–	–
		Reset	–	–
	Network Reset	Reset	–	–

LEVEL 1	LEVEL 2	LEVEL 3	All File	Scene File
Maintenance	Language	Select	Yes	No
	Clock Set	Time Zone	Yes	No
		Date Mode	Yes	No
		12h/24h	Yes	No
		Date	No	No
		Time	No	No
	All Reset	Reset	–	–
		Reset without Network	–	–
	Hours Meter	Hours(System)	–	–
		Hours(Reset)	–	–
		Reset	–	–
	Version	Version Number	–	–
		Version Up	–	–
		Lens Version Number	–	–

Items Configured by Assignable Buttons

Yes: Item is saved.
No: Item is not saved.
–: Not saved (temporary setting)

Assignable button selection	All File	Scene File
ND Filter Position	Yes	No
Auto Iris	Yes	No
ATW	Yes	No
Focus Setting	Yes	No
Display	Yes	–
VF Adjust	Yes	–

Items Configured by the Assignable Dial

Yes: Item is saved.
No: Item is not saved.
–: Not saved (temporary setting)

Assignable dial selection	All File	Scene File
IRIS	Yes	No
ND Filter	Yes	No
Audio Input Level	Yes	No

Block Diagrams

See related items in “Setting the Audio to Record” (page 47) and “User Menu” (page 73).

Audio Input (CH1&CH2)

The following shows the block diagram with the handle attached.

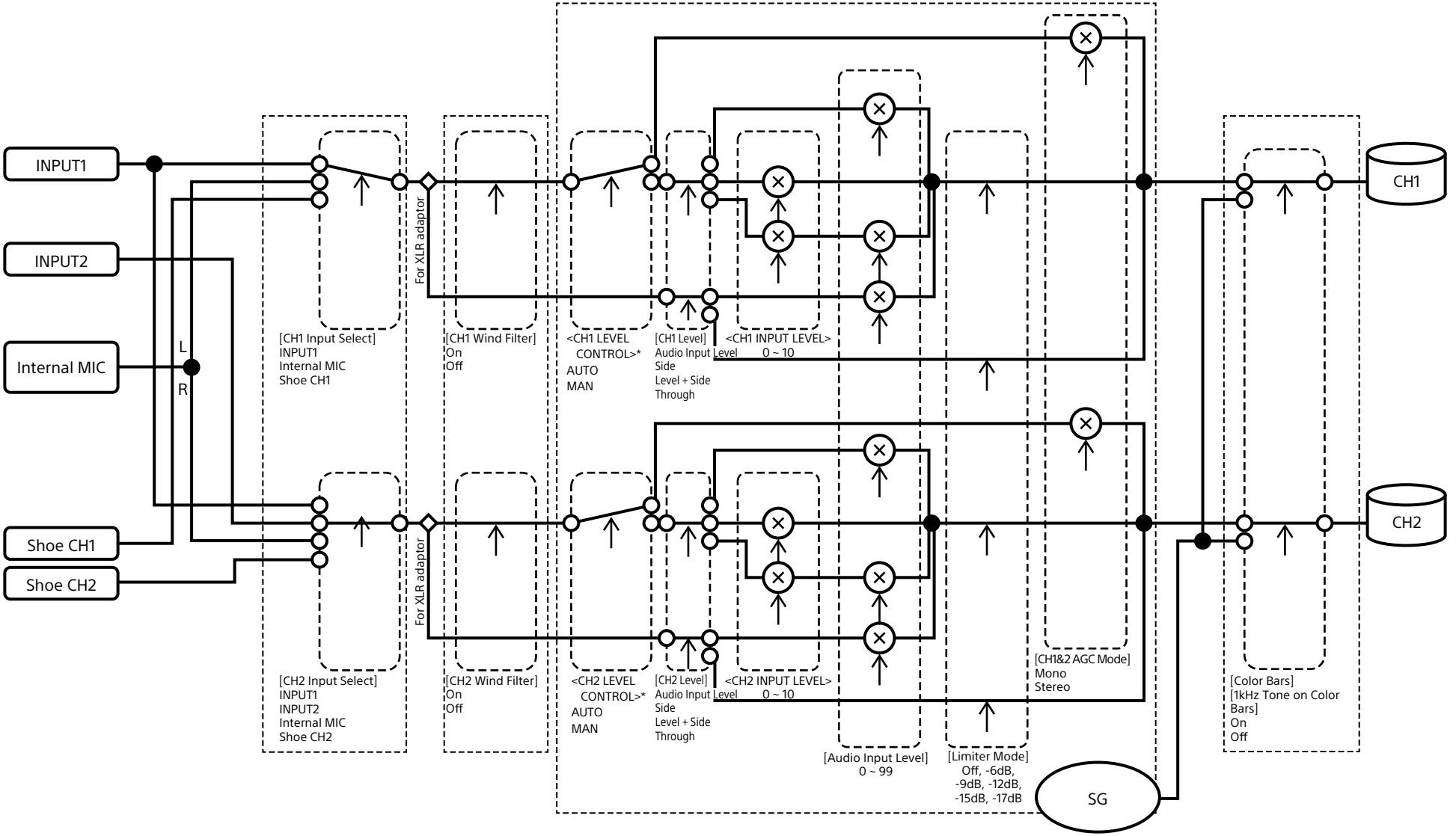

* Set to Manual when audio is input from XLR adaptor.

Audio Input (CH3&CH4)

The following shows the block diagram with the handle attached.

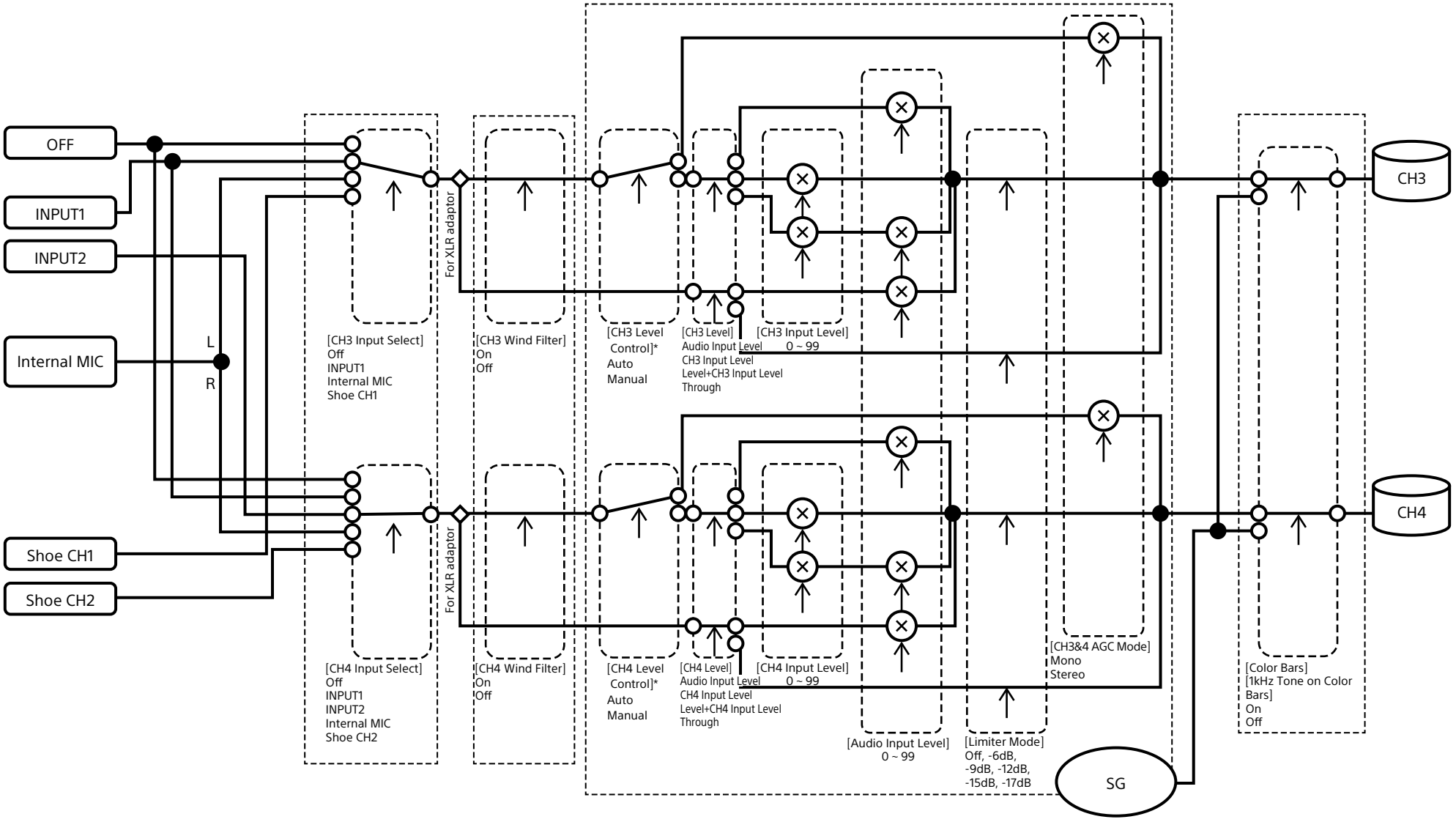

* Set to Manual when audio is input from XLR adaptor.

Audio Output

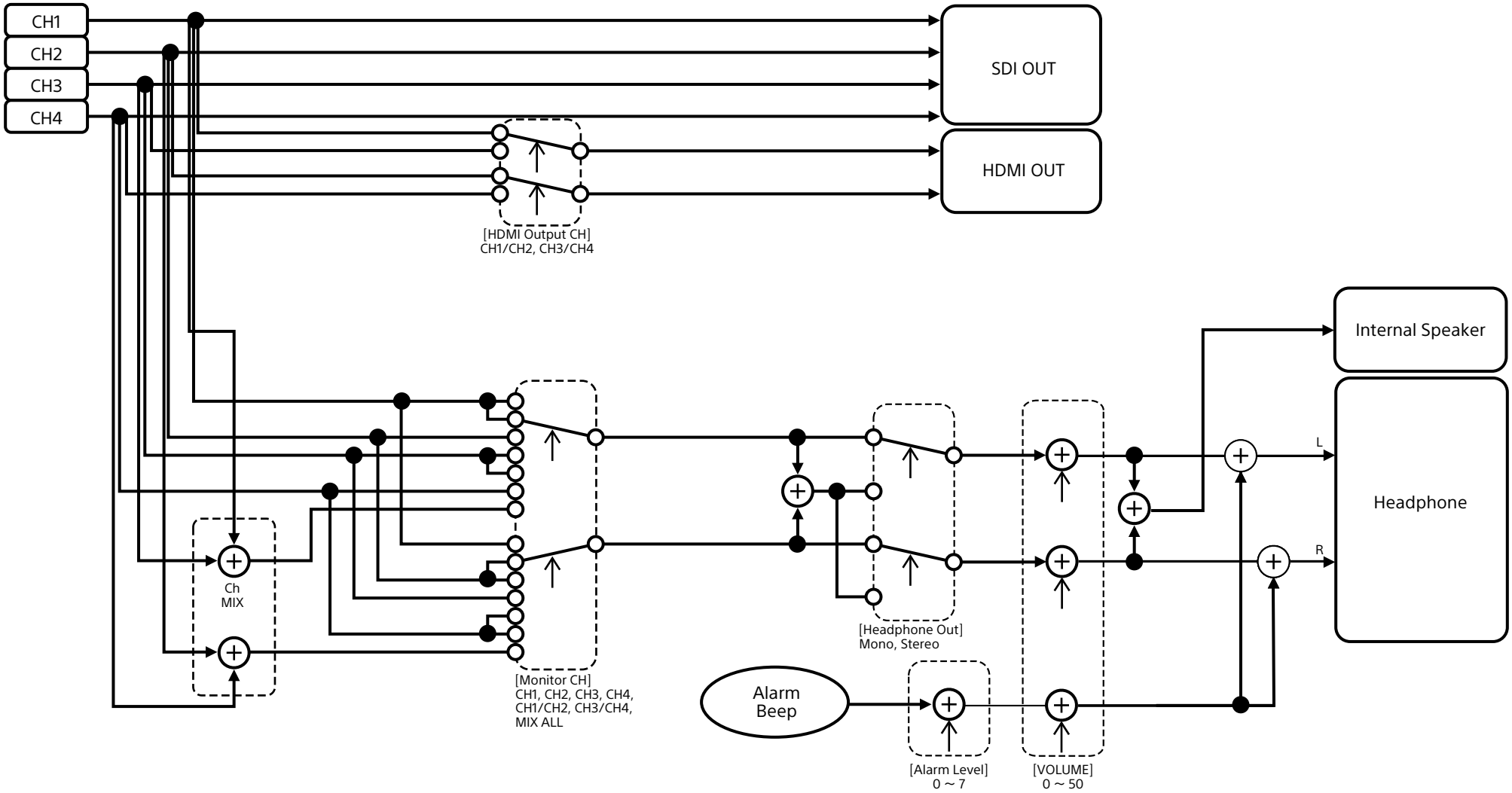

Updating E-mount Lens Software

You can update the software of an E-mount lens using the camcorder.
Refer to the web site for the lens for lenses that can be updated and the corresponding software.

Checking the Version

1 Attach an E-mount lens to the camcorder (page 22).

2 Select Version in the Maintenance menu of the full menu to display Lens Version Number (page 104).
The software version number of the E-mount lens is displayed on the side.

Updating Software

Set the camcorder to mass storage mode (page 113).
Update the software following the procedure supplied with the lens software.

Licenses

MPEG-4 AVC Patent Portfolio License

THIS PRODUCT IS LICENSED UNDER THE AVC PATENT PORTFOLIO LICENSE FOR THE PERSONAL USE OF A CONSUMER OR OTHER USES IN WHICH IT DOES NOT RECEIVE REMUNERATION TO

(i) ENCODE VIDEO IN COMPLIANCE WITH THE AVC STANDARD ("AVC VIDEO") AND/OR

(ii) DECODE AVC VIDEO THAT WAS ENCODED BY A CONSUMER ENGAGED IN A PERSONAL ACTIVITY AND/OR WAS OBTAINED FROM A VIDEO PROVIDER LICENSED TO PROVIDE AVC VIDEO.

NO LICENSE IS GRANTED OR SHALL BE IMPLIED FOR ANY OTHER USE. ADDITIONAL INFORMATION MAY BE OBTAINED FROM MPEG LA, L.L.C. SEE HTTP://WWW.MPEGLA.COM

Obtaining Software Under the GPL/LGPL License

This product uses software to which the GPL/LGPL applies. This informs you that you have a right to have access to, modify, and redistribute source code for these software programs under the conditions of the GPL/LGPL.
The source code is provided on the internet. Use the following URL and follow the download instructions.
https://oss.sony.net/Products/Linux/

We would prefer that you do not contact us about the contents of the source code.

Licenses (in English) are recorded in the internal memory of your product.
Establish a Mass Storage connection between the product and a computer to read licenses in the "PMHOME" - "LICENSE" folder.

If using a Mac, the "PMHOME" - "LICENSE" folder may not be accessible.
To view the files, use a computer other than a Mac or visit the following URL.
https://oss.sony.net/License/ILME-FX6/

END USER LICENSE AGREEMENT

IMPORTANT:
BEFORE USING THE SOFTWARE CONTAINED IN THE SOLID STATE MEMORY CAMCORDER, PLEASE READ THIS END USER LICENSE AGREEMENT ("EULA") CAREFULLY. BY USING THE SOFTWARE YOU ARE ACCEPTING THE TERMS OF THIS EULA. IF YOU DO NOT ACCEPT THE TERMS OF THIS EULA, YOU MAY NOT USE THE SOFTWARE.

This EULA is a legal agreement between you and Sony Corporation ("SONY"). This EULA governs your rights and obligations regarding the software of SONY and/or its third party licensors (including SONY's affiliates) and their respective affiliates (collectively, the "THIRD-PARTY SUPPLIERS") contained in the wireless adapter, together with any updates/ upgrades provided by SONY, any printed, on-line or other electronic documentation for such software, and any data files created by operation of such software (collectively, the "SOFTWARE").

Notwithstanding the foregoing, any software in the SOFTWARE having a separate end user license agreement (including, but not limited to, GNU General Public license and Lesser/Library General Public License) shall be covered by such applicable separate end user license agreement in lieu of the terms of this EULA to the extent required by such separate end user license agreement ("EXCLUDED SOFTWARE").

SOFTWARE LICENSE
The SOFTWARE is licensed, not sold. The SOFTWARE is protected by copyright and other intellectual property laws and international treaties.

COPYRIGHT
All right and title in and to the SOFTWARE (including, but not limited to, any images, photographs, animation, video, audio, music, text and "applets" incorporated into the SOFTWARE) is owned by SONY or one or more of the THIRD-PARTY SUPPLIERS.

GRANT OF LICENSE
SONY grants you a limited license to use the SOFTWARE solely in connection with the wireless adapter and only for your individual use. SONY and the THIRD-PARTY SUPPLIERS expressly reserve all rights, title and interest (including, but not limited to, all intellectual property rights) in and to the SOFTWARE that this EULA does not specifically grant to you.

REQUIREMENTS AND LIMITATIONS
You may not copy, publish, adapt, redistribute, attempt to derive source code, modify, reverse engineer, decompile, or disassemble any of the SOFTWARE, whether in whole or in part, or create any derivative works from or of the SOFTWARE unless such derivative works are intentionally facilitated by the SOFTWARE. You may not modify or tamper with any digital rights management functionality of the SOFTWARE. You may not bypass, modify, defeat or circumvent any of the functions or protections of the SOFTWARE or any mechanisms operatively linked to the SOFTWARE. You may not separate any individual component of the SOFTWARE for use on more than one wireless adapter unless expressly authorized to do so by SONY. You may not remove, alter, cover or deface any trademarks or notices on the SOFTWARE. You may not share, distribute, rent, lease, sublicense, assign, transfer or sell the SOFTWARE. The software, network services or other products other than SOFTWARE upon which the SOFTWARE'S performance depends might be interrupted or discontinued at the discretion of the suppliers (software suppliers, service suppliers, or SONY). SONY and such suppliers do not warrant that the SOFTWARE, network services, contents or other products will continue to be available, or will operate without interruption or modification.

EXCLUDED SOFTWARE AND OPEN SOURCE COMPONENTS
Notwithstanding the foregoing limited license grant, you acknowledge that the SOFTWARE may include EXCLUDED SOFTWARE. Certain EXCLUDED SOFTWARE may be covered by open source software licenses ("Open Source Components"), which means any software licenses approved as open source licenses by the Open Source Initiative or any substantially similar licenses, including but not limited to any license that, as a condition of distribution of the software licensed under such license, requires that the distributor make the software available in source code format. If and to the extent disclosure is required, please visit www.sony.com/linux or other SONY-designated web site for a list of applicable OPEN SOURCE COMPONENTS included in the SOFTWARE from time to time, and the applicable terms and conditions governing its use. Such terms and conditions may be changed by the applicable third party at any time without liability to you. To the extent required by the licenses covering EXCLUDED SOFTWARE, the terms of such licenses will apply in lieu of the terms of this EULA. To the extent the terms of the licenses applicable to EXCLUDED SOFTWARE prohibit any of the restrictions in this EULA with respect to such EXCLUDED SOFTWARE, such restrictions will not apply to such EXCLUDED SOFTWARE. To the extent the terms of the licenses applicable to Open Source Components require SONY to make an offer to provide source code in connection with the SOFTWARE, such offer is hereby made.

USE OF SOFTWARE WITH COPYRIGHTED MATERIALS
The SOFTWARE may be capable of being used by you to view, store, process and/or use content created by you and/or third parties. Such content may be protected by copyright, other intellectual property laws, and/or agreements. You agree to use the SOFTWARE only in compliance with all such laws and agreements that apply to such content. You acknowledge and agree that SONY may take appropriate measures to protect the copyright of content stored, processed or used by the SOFTWARE. Such measures include, but are not

limited to, counting the frequency of your backup and restoration through certain SOFTWARE features, refusal to accept your request to enable restoration of data, and termination of this EULA in the event of your illegitimate use of the SOFTWARE.

CONTENT SERVICE

PLEASE ALSO NOTE THAT THE SOFTWARE MAY BE DESIGNED TO BE USED WITH CONTENT AVAILABLE THROUGH ONE OR MORE CONTENT SERVICES ("CONTENT SERVICE"). USE OF THE SERVICE AND THAT CONTENT IS SUBJECT TO THE TERMS OF SERVICE OF THAT CONTENT SERVICE. IF YOU DECLINE TO ACCEPT THOSE TERMS, YOUR USE OF THE SOFTWARE WILL BE LIMITED. You acknowledge and agree that certain content and services available through the SOFTWARE may be provided by third parties over which SONY has no control. USE OF THE CONTENT SERVICE REQUIRES AN INTERNET CONNECTION. THE CONTENT SERVICE MAY BE DISCONTINUED AT ANY TIME.

INTERNET CONNECTIVITY AND THIRD PARTY SERVICES

You acknowledge and agree that access to certain SOFTWARE features may require an Internet connection for which you are solely responsible. Further, you are solely responsible for payment of any third party fees associated with your Internet connection, including but not limited to Internet service provider or airtime charges. Operation of the SOFTWARE may be limited or restricted depending on the capabilities, bandwidth or technical limitations of your Internet connection and service. The provision, quality and security of such Internet connectivity are the sole responsibility of the third party providing such service.

EXPORT AND OTHER REGULATIONS

You agree to comply with all applicable export and re-export restrictions and regulations of the area or country in which you reside, and not to transfer, or authorize the transfer, of the SOFTWARE to a prohibited country or otherwise in violation of any such restrictions or regulations.

HIGH RISK ACTIVITIES

The SOFTWARE is not fault-tolerant and is not designed, manufactured or intended for use or resale as on-line control equipment in hazardous environments requiring fail-safe performance, such as in the operation of nuclear facilities, aircraft navigation or communication systems, air traffic control, direct life support machines, or weapons systems, in which the failure of the SOFTWARE could lead to death, personal injury, or severe physical or environmental damage ("HIGH RISK ACTIVITIES"). SONY, each of the THIRD-PARTY SUPPLIERS, and each of their respective affiliates specifically disclaim any express or implied warranty, duty or condition of fitness for HIGH RISK ACTIVITIES.

EXCLUSION OF WARRANTY ON SOFTWARE

You acknowledge and agree that use of the SOFTWARE is at your sole risk and that you are responsible for use of the SOFTWARE. The SOFTWARE is provided "AS IS," without warranty, duty or condition of any kind.

SONY AND EACH OF THE THIRD-PARTY SUPPLIERS (for purposes of this Section, SONY and each of the THIRD-PARTY SUPPLIERS shall be collectively referred to as "SONY") EXPRESSLY DISCLAIM ALL WARRANTIES, DUTIES OR CONDITIONS, EXPRESS OR IMPLIED, INCLUDING, BUT NOT LIMITED TO, THE IMPLIED WARRANTIES OF MERCHANTABILITY, NONINFRINGEMENT AND FITNESS FOR A PARTICULAR PURPOSE. SONY DOES NOT WARRANT OR MAKE ANY CONDITIONS OR REPRESENTATIONS (A) THAT THE FUNCTIONS CONTAINED IN ANY OF THE SOFTWARE WILL MEET YOUR REQUIREMENTS OR THAT THEY WILL BE UPDATED, (B) THAT THE OPERATION OF ANY OF THE SOFTWARE WILL BE CORRECT OR ERROR-FREE OR THAT ANY DEFECTS WILL BE CORRECTED, (C) THAT THE SOFTWARE WILL NOT DAMAGE ANY OTHER SOFTWARE, HARDWARE OR DATA, (D) THAT ANY SOFTWARE, NETWORK SERVICES (INCLUDING THE INTERNET) OR PRODUCTS (OTHER THAN THE SOFTWARE) UPON WHICH THE SOFTWARE'S PERFORMANCE DEPENDS WILL CONTINUE TO BE AVAILABLE, UNINTERRUPTED OR UNMODIFIED, AND (E) REGARDING THE USE OR THE RESULTS OF THE USE OF THE SOFTWARE IN TERMS OF ITS CORRECTNESS, ACCURACY, RELIABILITY, OR OTHERWISE.

NO ORAL OR WRITTEN INFORMATION OR ADVICE GIVEN BY SONY OR AN AUTHORIZED REPRESENTATIVE OF SONY SHALL CREATE A WARRANTY, DUTY OR CONDITION OR IN ANY WAY INCREASE THE SCOPE OF THIS WARRANTY. SHOULD THE SOFTWARE PROVE DEFECTIVE YOU ASSUME THE ENTIRE COST OF ALL NECESSARY SERVICING, REPAIR OR CORRECTION. SOME JURISDICTIONS DO NOT ALLOW THE EXCLUSION OF IMPLIED WARRANTIES, SO THESE EXCLUSIONS MAY NOT APPLY TO YOU.

LIMITATION OF LIABILITY

SONY AND EACH OF THE THIRD-PARTY SUPPLIERS (for purposes of this Section, SONY and each of the THIRD-PARTY SUPPLIERS shall be collectively referred to as "SONY") SHALL NOT BE LIABLE FOR ANY INCIDENTAL OR CONSEQUENTIAL DAMAGES FOR BREACH OF ANY EXPRESS OR IMPLIED WARRANTY, BREACH OF CONTRACT, NEGLIGENCE, STRICT LIABILITY OR UNDER ANY OTHER LEGAL THEORY RELATED TO THE SOFTWARE, INCLUDING, BUT NOT LIMITED TO, ANY DAMAGES ARISING OUT OF LOSS OF PROFITS, LOSS OF REVENUE, LOSS OF DATA, LOSS OF USE OF THE SOFTWARE OR ANY ASSOCIATED HARDWARE, DOWN TIME AND USER'S TIME, EVEN IF ANY OF THEM HAVE BEEN ADVISED OF THE POSSIBILITY OF SUCH DAMAGES. IN ANY CASE, EACH AND ALL OF THEIR AGGREGATE LIABILITY UNDER ANY PROVISION OF THIS EULA SHALL BE LIMITED TO THE AMOUNT ACTUALLY PAID FOR THE PRODUCT. SOME JURISDICTIONS DO NOT ALLOW THE EXCLUSION OR LIMITATION OF INCIDENTAL OR CONSEQUENTIAL DAMAGES, SO THE ABOVE EXCLUSION OR LIMITATION MAY NOT APPLY TO YOU.

CONSENT TO USE OF NON-PERSONAL INFORMATION, LOCATION DATA, DATA SECURITY

You acknowledge and agree that SONY and its affiliates, partners and agents may read, collect, transfer, process and store certain information collected from the SOFTWARE, including but not limited to information about (i) the SOFTWARE and (ii) the software applications, contents and peripheral devices that interact with your wireless adapter and the SOFTWARE ("Information"). Information includes, but is not limited to: (1) unique identifiers relating to your wireless adapter and its components; (2) performance of the wireless adapter, the SOFTWARE and their components; (3) configurations of your wireless adapter, the SOFTWARE and the software applications, contents and peripheral devices that interact with the wireless adapter and the SOFTWARE; (4) use and frequency of use of the functions of (x) the SOFTWARE, and (y) the software applications, contents and peripheral devices that interact with the SOFTWARE; and (5) location data, as indicated below. SONY and its affiliates, partners and agents may use and disclose Information subject to applicable laws in order to improve its products and services or to provide products or services to you. Such uses include, but are not limited to: (a) administering the functionalities of the SOFTWARE; (b) to improve, service, update or upgrade the SOFTWARE; (c) improving, developing and enhancing the current and future products and services of SONY and other parties; (d) to provide you with information about the products and services offered by SONY and other parties; (e) complying with applicable laws or regulations; and (f) to the extent offered, providing you with location-based services of SONY and other parties, as indicated below. In addition, SONY retains the right to use Information to protect itself and third parties from illegal, criminal or harmful conduct.

Certain services available through the SOFTWARE may rely upon location information, including, but not limited to, the geographic location of the wireless adapter. You acknowledge that for the purpose of providing such services, SONY, the THIRDPARTY SUPPLIERS or their partners may collect, archive, process and use such location data, and that such services are governed by the privacy policies of SONY or such third party. By reviewed the privacy policies applicable to such services and consent to such activities.

SONY, its affiliates, partners and agents will not intentionally use Information to personally identify the owner or user of the SOFTWARE without your knowledge or consent. Any use of Information will be in accordance with the privacy policies of SONY or such third party.

Please contact applicable contact address of each area or country for SONY's current privacy policy. Please contact applicable third parties for privacy policies relating to personally identifiable and other information you provide when you use or access third party software or services.

Information may be processed, stored or transferred to SONY, its affiliates or agents which are located in countries outside of your country of residence. Data protection and information privacy laws in certain countries may not offer the same level of protection as your country of residence and you may have fewer legal rights in relation to Information processed and stored in, or transferred to, such countries. SONY will use reasonable efforts to take appropriate technical and organizational steps to prevent unauthorized access to or disclosure of Information, but does not warrant it will eliminate all risk of misuse of such Information.

AUTOMATIC UPDATE FEATURE
From time to time, SONY or the THIRD-PARTY SUPPLIERS may automatically update or otherwise modify the SOFTWARE, including, but not limited to, for purposes of enhancement of security functions, error correction and improvement of functions, at such time as you interact with SONY's or third parties' servers, or otherwise. Such updates or modifications may delete or change the nature of features or other aspects of the SOFTWARE, including, but not limited to, functions you may rely upon. You acknowledge and agree that such activities may occur at SONY's sole discretion and that SONY may condition continued use of the SOFTWARE upon your complete installation or acceptance of such update or modifications. Any updates/modifications shall be deemed to be, and shall constitute part of, the SOFTWARE for purposes of this EULA. By acceptance of this EULA, you consent to such update/modification.

ENTIRE AGREEMENT, WAIVER, SEVERABILITY
This EULA and SONY's privacy policy, each as amended and modified from time to time, together constitute the entire agreement between you and SONY with respect to the SOFTWARE. The failure of SONY to exercise or enforce any right or provision of this EULA shall not constitute a waiver of such right or provision. If any part of this EULA is held invalid, illegal, or unenforceable, that provision shall be enforced to the maximum extent permissible so as to maintain the intent of this EULA, and the other parts will remain in full force and effect.

GOVERNING LAW AND JURISDICTION
The United Nations Convention on Contracts for the International Sale of Goods shall not apply to this EULA. This EULA shall be governed by the laws of Japan, without regards to conflict of laws provisions. Any dispute arising out of this EULA shall be subject to the exclusive venue of the Tokyo District Court in Japan, and the parties hereby consent to the venue and jurisdiction of such courts.

EQUITABLE REMEDIES
Notwithstanding anything contained in this EULA to the contrary, you acknowledge and agree that any violation of or noncompliance with this EULA by you will cause irreparable harm to SONY, for which monetary damages would be inadequate, and you consent to SONY obtaining any injunctive or equitable relief that SONY deems necessary or appropriate in such circumstances. SONY may also take any legal and technical remedies to prevent violation of and/or to enforce this EULA, including, but not limited to, immediate termination of your use of the SOFTWARE, if SONY believes in its sole discretion that you are violating or intend to violate this EULA. These remedies are in addition to any other remedies SONY may have at law, in equity or under contract.

TERMINATION
Without prejudice to any of its other rights, SONY may terminate this EULA if you fail to comply with any of its terms. In case of such termination, you must: (i) cease all use, and destroy any copies, of the SOFTWARE; (ii) comply with the requirements in the section below entitled "Your Account Responsibilities".

AMENDMENT
SONY RESERVES THE RIGHT TO AMEND ANY OF THE TERMS OF THIS EULA AT ITS SOLE DISCRETION BY POSTING NOTICE ON A SONY DESIGNATED WEB SITE, BY EMAIL NOTIFICATION TO AN EMAIL ADDRESS PROVIDED BY YOU, BY PROVIDING NOTICE AS PART OF THE PROCESS IN WHICH YOU OBTAIN UPGRADES/ UPDATES OR BY ANY OTHER LEGALLY RECOGNIZABLE FORM OF NOTICE. If you do not agree to the amendment, you should promptly contact SONY for instructions. Your continued use of the SOFTWARE after the effective date of any such notice shall be deemed your agreement to be bound by such amendment.

THIRD-PARTY BENEFICIARIES
Each THIRD-PARTY SUPPLIER is an express intended thirdparty beneficiary of, and shall have the right to enforce, each provision of this EULA with respect to the SOFTWARE of such party.

Should you have any questions concerning this EULA, you may contact SONY by writing to SONY at applicable contact address of each area or country.

Copyright © 2012 Sony Corporation.

Open Source Software Licenses

On the basis of license contracts between Sony and the software copyright holders, this product uses open software.
To meet the requirements of the software copyright holders, Sony is obligated to inform you of the content of these licenses.
Licenses (in English) are recorded in the internal memory of your product.
Establish a Mass Storage connection between the product and a computer to read licenses in the "PMHOME" - "LICENSE" folder.

If using a Mac, the "PMHOME" - "LICENSE" folder may not be accessible.
To view the files, use a computer other than a Mac or visit the following URL.
https://oss.sony.net/License/ILME-FX6/

Specifications

General

Mass
- Approx. 890 g (1 lb 15 oz) (main body only)
- Approx. 2.59 kg (5 lb 11 oz) (including SEL24105G lens, lens hood, battery (BP-U35), viewfinder, handle, grip)

Dimensions
- See page 139.

Power requirements
- 19.5 V DC (18.0 V to 20.5 V)

Power consumption
- Approx. 18.0 W (body, lens, XAVC-I QFHD 59.94P recording, viewfinder on, no external device connected)
- Approx. 36.0 W (body, lens, XAVC-I QFHD 59.94P recording (S&Q 120 fps), viewfinder on, HDMI, SDI, external device connected)

Operating temperature
- 0 °C to 40 °C (32 °F to 104 °F)

Storage temperature
- –20 °C to +60 °C (–4 °F to +140 °F)

Continuous operating time
- Approx. 105 minutes (using BP-U35) (body, lens, XAVC-I QFHD 59.94P recording, viewfinder on, no external device connected)

Recording format (video)
- XAVC Intra
  - XAVC-I 4K/QFHD mode: VBR, 600 Mbps (max) bit rate, MPEG-4 AVC/H.264
  - XAVC-I HD mode: CBG, 223 Mbps (max) bit rate, MPEG-4 AVC/H.264
- XAVC Long
  - XAVC-L QFHD mode: VBR, 150 Mbps (max) bit rate, MPEG-4 H.264/AVC
  - XAVC-L HD 50 mode: VBR, 50 Mbps (max) bit rate, MPEG-4 H.264/AVC
  - XAVC-L HD 35 mode: VBR, 35 Mbps (max) bit rate, MPEG-4 H.264/AVC

Recording format (audio)
- LPCM 24-bit, 48 kHz, 4-channel

Recording frame rate
- XAVC Intra
  - XAVC-I 4K mode: 4096×2160/59.94P, 50P, 29.97P, 25P, 24P, 23.98P
  - XAVC-I QFHD mode: 3840×2160/59.94P, 50P, 29.97P, 25P, 23.98P
  - XAVC-I HD mode: 1920×1080/59.94P, 50P, 29.97P, 25P, 23.98P
- XAVC Long
  - XAVC-L QFHD mode: 3840×2160/59.94P, 50P, 29.97P, 25P, 23.98P
  - XAVC-L HD 50 mode: 1920×1080/59.94P, 50P, 29.97P, 25P, 23.98P
  - XAVC-L HD 35 mode: 1920×1080/59.94P, 50P, 29.97P, 25P, 23.98P

Recording/playback time
- XAVC Intra
  - XAVC-I QFHD mode: 59.94P, Approx. 30 minutes (using CEA-G160T)
  - XAVC-I HD mode: 59.94P, Approx. 78 minutes (using CEA-G160T)
- XAVC Long
  - XAVC-L QFHD mode: 59.94P, Approx. 115 minutes (using CEA-G160T)
  - XAVC-L HD 50 mode: 59.94P, Approx. 155 minutes (using CEA-G80T)
  - XAVC-L HD 35 mode: 59.94P, Approx. 210 minutes (using CEA-G80T)

[Note]
The recording/playback time may vary due to usage conditions and memory characteristics. The recording and playback times are for a continuous recording as a single clip. The actual times may be shorter, depending on the number of clips recorded.

Camera Section

Imaging device (type)
- 35 mm full-frame equivalent, single-chip CMOS image sensor

Number of pixels
- 12.9M (total)
- 10.2M (effective)

Auto focus
- Detection method: Phase detection/contrast detection

Internal ND filters
- CLEAR: OFF
- 1: 1/4ND
- 2: 1/16ND
- 3: 1/64ND
- Linearly variable ND: 1/4ND to 1/128ND

ISO sensitivity
- ISO 800/12800 (Cine EI mode, D55 Light source)

Lens mount
- E-mount

Latitude
- 15+ stops

Shutter speed
- 64F to 1/8000 sec. (23.98P)

Shutter angle
- 5.6° to 360°, 2 to 64 frames

Slow & Quick Motion
- XAVC QFHD: 1 fps to 120 fps
- XAVC HD: 1 fps to 240 fps
- XAVC 4K: 1 fps to 60 fps
- XAVC HD (S35): 1 fps to 120 fps

White balance
- 2000 K to 15000 K

Gain
- –3 dB to +30 dB (1 dB increments)

Base look
- S-Cinetone, Standard, Still, ITU709, s709, 709(800%), S-Log3, HLG Live, HLG Natural

Audio Section

Sampling frequency
    48 kHz
Quantization
    24-bit
Frequency response
    XLR input MIC mode: 20 Hz to 20 kHz (±3 dB or less)
    XLR input LINE mode: 20 Hz to 20 kHz (±3 dB or less)
Dynamic range
    XLR input MIC mode: 80 dB (Typical)
    XLR input LINE mode: 90 dB (Typical)
Distortion
    XLR input MIC mode: 0.08% or lower (–40 dBu input level)
    XLR input LINE mode: 0.08% or lower (+14 dBu input level)
Built-in speaker
    Monaural
Internal microphone
    Monaural
Handle internal microphone
    Omnidirectional stereo electret condenser microphone

[Note]
Only the handle internal microphone becomes active when the handle is attached.

Input/Output Section

Inputs

INPUT 1/2:
    XLR type, 3-pin, female
    LINE / MIC / MIC+48V switchable
    MIC: Reference –30 dBu to –80 dBu
TC IN:
    BNC type

Outputs

SDI OUT:
    BNC type, 12G-SDI, 6G-SDI, 3G-SDI (Level A/B), HD-SDI
Headphones (stereo mini jack):
    –16 dBu (reference level output, maximum monitor volume, 16 Ω load)
HDMI:
    Type A, 19-pin
TC OUT:
    BNC type

Other

DC IN:
    EIAJ compliant, 18 V to 20.5 V DC
Multi-interface shoe:
    Dedicated (21-pin)
REMOTE:
    2.5 mm 3-pole sub-mini type
Grip remote control connector:
    3.5 mm 4-pole stereo mini jack (supplied connector for grip remote control)
USB-C:
    USB 3.2 Gen 1
USB/multi:
    USB 2.0 standard compliant, micro B type for mass storage (1)
VF:
    Dedicated (40-pin)

Display Section

Viewfinder (LCD)

Screen size
    8.8 cm (3.5 inch) diagonal
Aspect ratio
    16:9
Number of pixels
    1280 (H) × 720 (V)

Media Slot Section

CFexpress Type A/SD card slot (2)

Wireless LAN

Supported standards
    IEEE 802.11 a/b/g/n/ac (ILME-FX6V/VK)
    IEEE 802.11 b/g/n (ILME-FX6T/TK)
Frequency band
    2.4 GHz
    5 GHz (ILME-FX6V/VK only)
Supported security protocols
    WEP/WPA-PSK/WPA2-PSK
Connection method
    Wi-Fi Protected Setup™ (WPS)/Manual
Access method
    Infrastructure mode

Battery charger (BC-CU1)

Mass
    Approx. 60 g (2.1 oz)
Dimensions
    Approx. 57 × 26 × 101 mm ($2\,^1/_4 \times 1\,^1/_{16} \times 4$ in) (width / height / depth)
Input
    19.5 V DC, 26 W
Output
    16.4 V DC, 1.4 A
Operating temperature
    0 °C to 40 °C (32 °F to 104 °F)
Storage temperature
    –20 °C to +60 °C (–4 °F to +140 °F)

Supplied Accessories

AC adaptor (1)
Power cord (1)
Battery charger (1)
Battery pack (1)
Handle (1)
LCD monitor (1)
USB-C cable (1)
Grip remote control (1)
LCD hood (1)
Cold shoe kit (1)
(Cold shoe (1), shoe spring (1), screws (4))
Lens mount cap (1)
Handle connector protective cap (1)
Before Using This Unit (1)
Warranty booklet (1)

Design and specifications are subject to change without notice.

Notes

- Always make a test recording, and verify that it was recorded successfully. SONY WILL NOT BE LIABLE FOR DAMAGES OF ANY KIND INCLUDING, BUT NOT LIMITED TO, COMPENSATION OR REIMBURSEMENT ON ACCOUNT OF FAILURE OF THIS UNIT OR ITS RECORDING MEDIA OR ANY OTHER MEDIA OR STORAGE SYSTEMS TO RECORD CONTENT OF ANY TYPE.
- Always verify that the unit is operating properly before use. SONY WILL NOT BE LIABLE FOR DAMAGES OF ANY KIND INCLUDING, BUT NOT LIMITED TO, COMPENSATION OR REIMBURSEMENT ON ACCOUNT OF THE LOSS OF PRESENT OR PROSPECTIVE PROFITS DUE TO FAILURE OF THIS UNIT, EITHER DURING THE WARRANTY PERIOD OR AFTER EXPIRATION OF THE WARRANTY, OR FOR ANY OTHER REASON WHATSOEVER.
- SONY WILL NOT BE LIABLE FOR CLAIMS OF ANY KIND MADE BY USERS OF THIS UNIT OR MADE BY THIRD PARTIES.
- SONY WILL NOT BE LIABLE FOR THE LOSS, REPAIR, OR REPRODUCTION OF ANY DATA RECORDED ON THE INTERNAL STORAGE SYSTEM, RECORDING MEDIA OR ANY OTHER MEDIA OR STORAGE SYSTEMS.
- SONY WILL NOT BE LIABLE FOR THE TERMINATION OR DISCONTINUATION OF ANY SERVICES RELATED TO THIS UNIT THAT MAY RESULT DUE TO CIRCUMSTANCES OF ANY KIND.

External Dimensions

Unit: mm (inches)

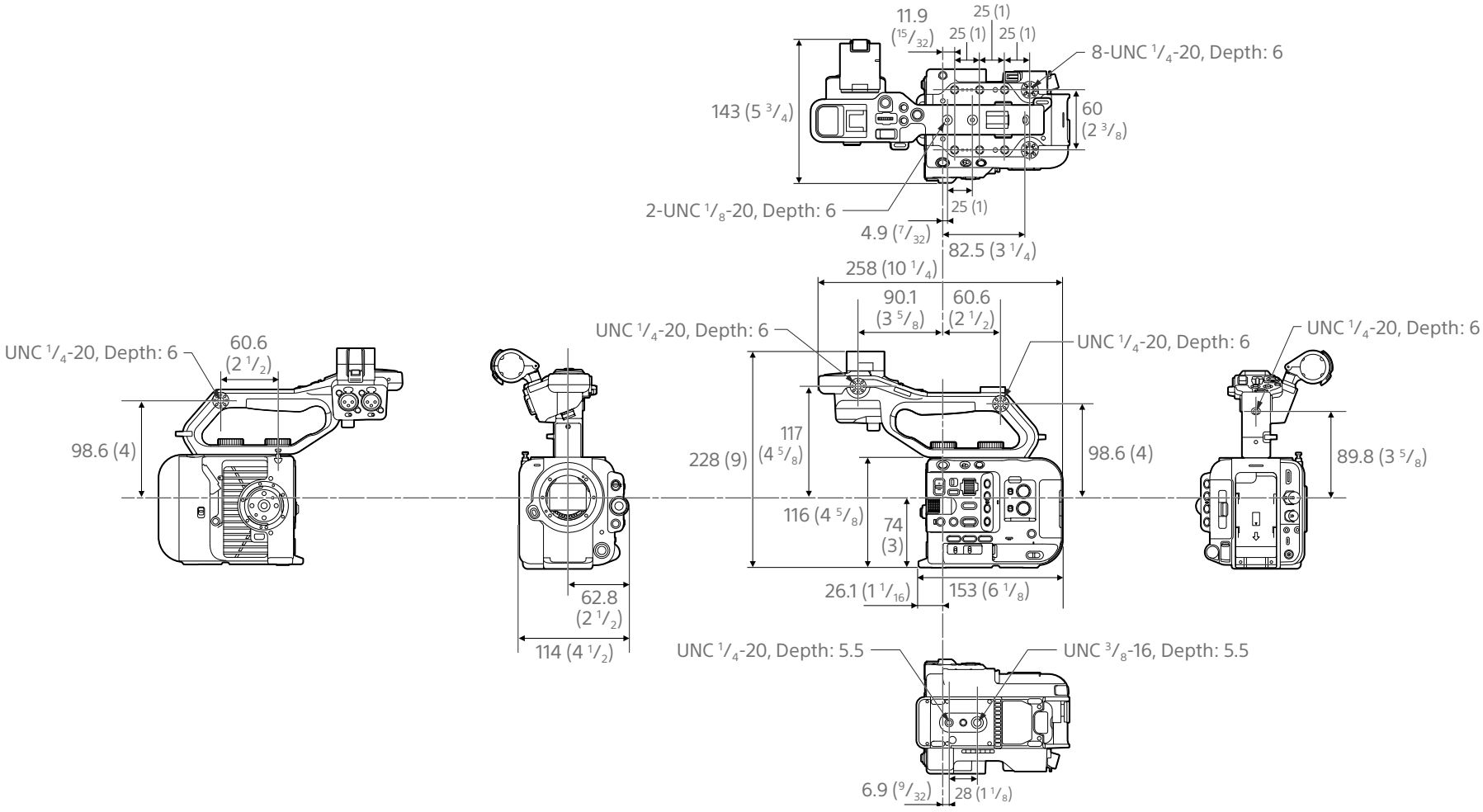

Dimensions are approximate values.

Trademarks

- α is a trademark of Sony Corporation.
- XAVC and XAVC are registered trademarks of Sony Corporation.
- The terms HDMI and HDMI High-Definition Multimedia Interface, and the HDMI Logo are trademarks or registered trademarks of HDMI Licensing Administrator, Inc. in the United States and other countries.
- Microsoft and Windows are trademarks or registered trademarks of Microsoft Corporation in the United States and/or other countries.
- Mac and macOS are registered trademarks of Apple Inc. in the U.S. and other countries.
- “Catalyst Browse,” “Content Browser Mobile,” and the “Content Browser Mobile” logo are trademarks or registered trademarks of Sony Corporation.
- IOS is a registered trademark or trademark of Cisco Systems, Inc. and/or its affiliates in the United States and certain other countries.
- Android, Google Play are trademarks of Google Inc.
- Wi-Fi, the Wi-Fi logo, and Wi-Fi PROTECTED SETUP are trademarks or registered trademarks of Wi-Fi Alliance.
- The N Mark is a trademark or registered trademark of NFC Forum, Inc. in the United States and in other countries.
- SDXC logo is a trademark of SD-3C, LLC.
- CFexpress and the CFexpress Type A logo are trademarks of the CompactFlash Association.
- QR Code is a trademark of Denso Wave Inc.

All other company names and product names are registered trademarks or trademarks of their respective owners. Trademarked items are not indicated by ™ or ® symbols in this document.